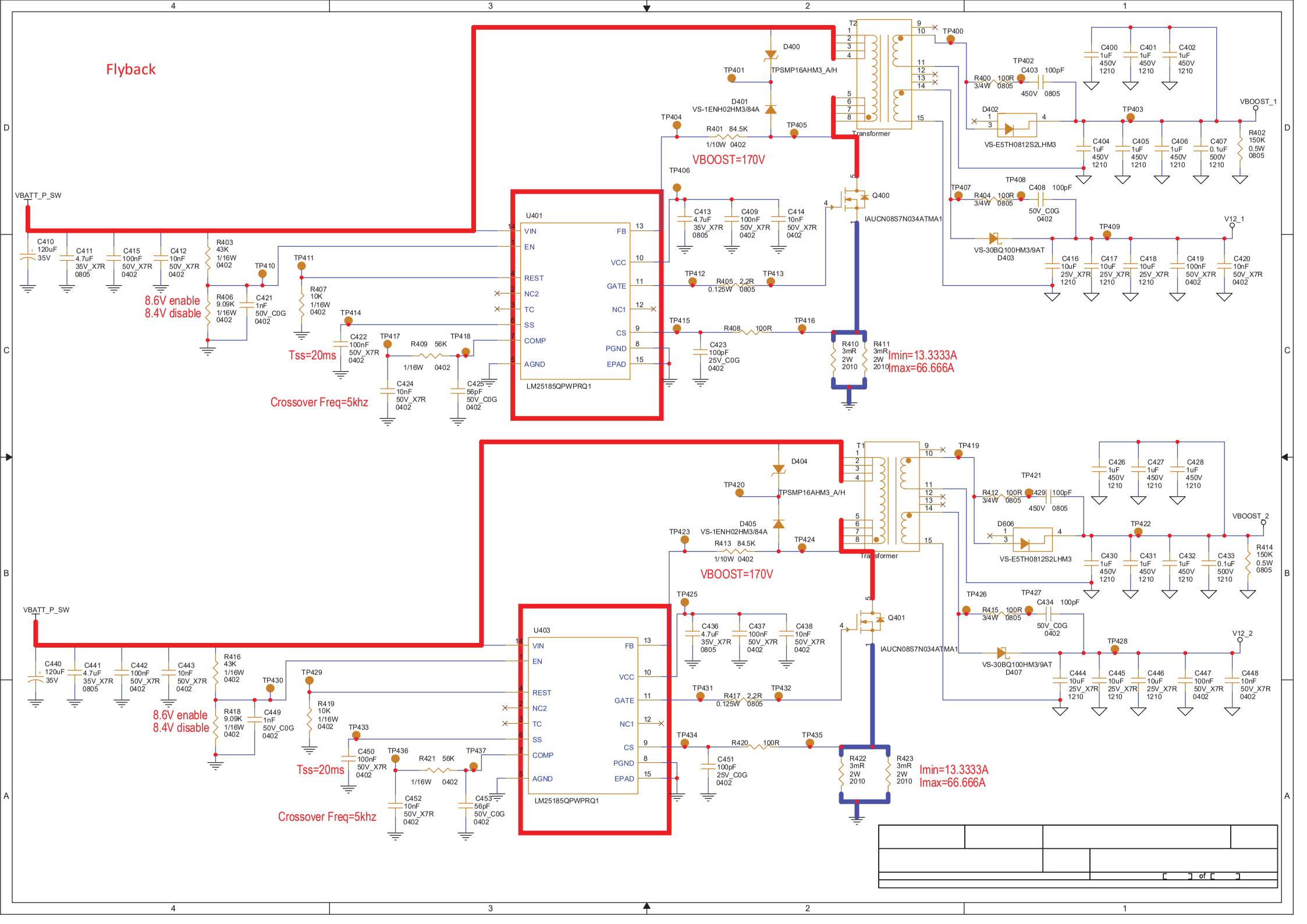
Flyback
VBATT_P_SW
C410 120uF 35V
C411 4.7uF 35V_X7R 0805
C415 100nF 50V_X7R 0402
C412 10nF 50V_X7R 0402
R403 43K 1/16W 0402
R406 9.09K 1/16W 0402
C421 1nF 50V_C0G 0402
TP410
TP411
R407 10K 1/16W 0402
8.6V enable
8.4V disable
TP414
C422 100nF 50V_X7R 0402
TP417
R409 56K 1/16W 0402
TP418
C424 10nF 50V_X7R 0402
C425 56pF 50V_C0G 0402
Tss=20ms
Crossover Freq=5khz
U401
VIN
EN
REST
NC2
TC
SS
COMP
AGND
FB
VCC
GATE
NC1
CS
PGND
EPAD
LM25185QPWPRQ1
D400
TPSMP16AHM3_A/H
TP401
D401
VS-1ENH02HM3/84A
TP404
R401 84.5K 1/10W 0402
TP405
VBOOST=170V
TP406
C413 4.7uF 35V_X7R 0805
C409 100nF 50V_X7R 0402
C414 10nF 50V_X7R 0402
TP412
R405 2.2R 0.125W 0805
TP413
TP415
R408 100R
TP416
C423 100pF 25V_C0G 0402
R410 3mR 2W 2010
R411 3mR 2W 2010
Imin=13.3333A
Imax=66.666A
T2
Transformer
TP400
Q400
IAUCN08S7N034ATMA1
TP402
R400 100R 3/4W 0805
C403 100pF 450V 0805
D402
VS-E5TH0812S2LHM3
C400 1uF 450V 1210
C401 1uF 450V 1210
C402 1uF 450V 1210
TP403
C404 1uF 450V 1210
C405 1uF 450V 1210
C406 1uF 450V 1210
C407 0.1uF 500V 1210
VBOOST_1
R402 150K 0.5W 0805
TP407
R404 100R 3/4W 0805
TP408
C408 100pF 50V_C0G 0402
TP409
VS-30BQ100HM3/9AT
D403
V12_1
C416 10uF 25V_X7R 1210
C417 10uF 25V_X7R 1210
C418 10uF 25V_X7R 1210
C419 100nF 50V_X7R 0402
C420 10nF 50V_X7R 0402
VBATT_P_SW
C440 120uF 35V
C441 4.7uF 35V_X7R 0805
C442 100nF 50V_X7R 0402
C443 10nF 50V_X7R 0402
R416 43K 1/16W 0402
R418 9.09K 1/16W 0402
C449 1nF 50V_C0G 0402
TP430
TP429
R419 10K 1/16W 0402
8.6V enable
8.4V disable
TP433
C450 100nF 50V_X7R 0402
TP436
R421 56K 1/16W 0402
TP437
C452 10nF 50V_X7R 0402
C453 56pF 50V_C0G 0402
Tss=20ms
Crossover Freq=5khz
U403
VIN
EN
REST
NC2
TC
SS
COMP
AGND
FB
VCC
GATE
NC1
CS
PGND
EPAD
LM25185QPWPRQ1
D404
TPSMP16AHM3_A/H
TP420
D405
VS-1ENH02HM3/84A
TP423
R413 84.5K 1/10W 0402
TP424
VBOOST=170V
TP425
C436 4.7uF 35V_X7R 0805
C437 100nF 50V_X7R 0402
C438 10nF 50V_X7R 0402
TP431
R417 2.2R 0.125W 0805
TP432
TP434
R420 100R
TP435
C451 100pF 25V_C0G 0402
R422 3mR 2W 2010
R423 3mR 2W 2010
Imin=13.3333A
Imax=66.666A
T1
Transformer
TP419
Q401
IAUCN08S7N034ATMA1
TP421
R412 100R 3/4W 0805
C429 100pF 450V 0805
D606
VS-E5TH0812S2LHM3
C426 1uF 450V 1210
C427 1uF 450V 1210
C428 1uF 450V 1210
TP422
C430 1uF 450V 1210
C431 1uF 450V 1210
C432 1uF 450V 1210
C433 0.1uF 500V 1210
VBOOST_2
R414 150K 0.5W 0805
TP426
R415 100R 3/4W 0805
TP427
C434 100pF 50V_C0G 0402
TP428
VS-30BQ100HM3/9AT
D407
V12_2
C444 10uF 25V_X7R 1210
C445 10uF 25V_X7R 1210
C446 10uF 25V_X7R 1210
C447 100nF 50V_X7R 0402
C448 10nF 50V_X7R 0402
[ ] of [ ]