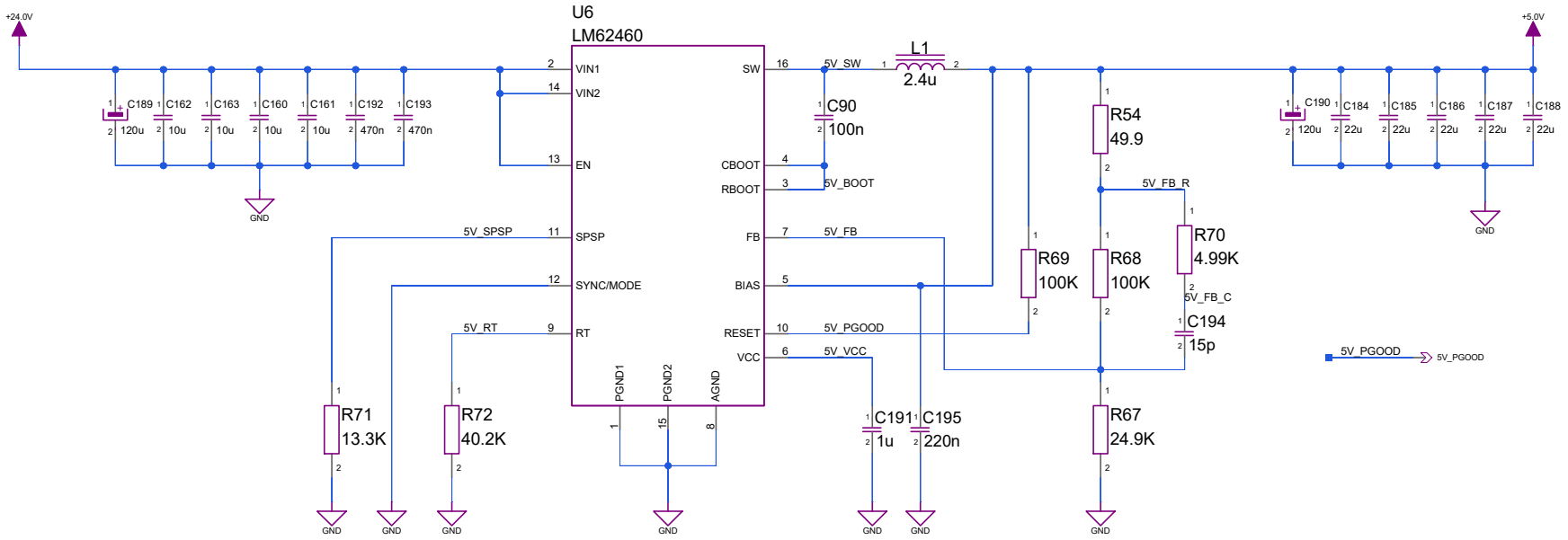

SIZE	CAGE CODE	DWG. NO.
A3	S E 4 5 5	810-XXXXXC
SCALE NONE	RELEASE DATE 2025/08/04	SHEET 2 OF 29

@ 2016 AEC. All rights reserved

810-XXXXXC