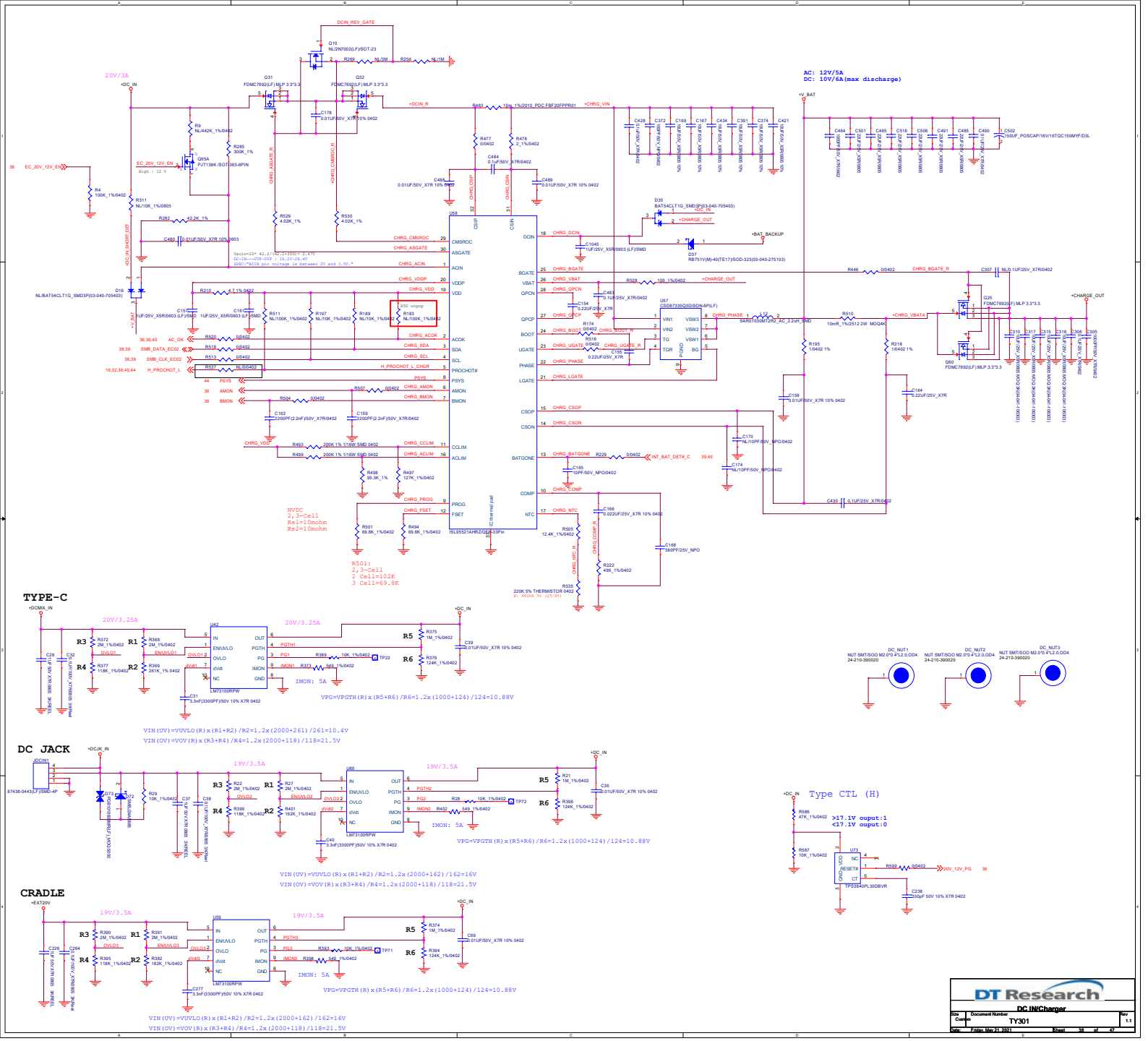
20V/3A
AC: 12V/5A
DC: 10V/6A(max discharge)
NVDC
2,3-Cell
Rs1=10mohm
Rs2=10mohm
R501:
2,3-Cell
2 Cell=102K
3 Cell=69.8K
TYPE-C
20V/3.25A
IMON: 5A
VPG=VPGTH(R)x(R5+R6)/R6=1.2x(1000+124)/124=10.88V
VIN(UV)=VUVLO(R)x(R1+R2)/R2=1.2x(2000+261)/261=10.4V
VIN(OV)=VOV(R)x(R3+R4)/R4=1.2x(2000+118)/118=21.5V
DC JACK
19V/3.5A
IMON: 5A
VPG=VPGTH(R)x(R5+R6)/R6=1.2x(1000+124)/124=10.88V
VIN(UV)=VUVLO(R)x(R1+R2)/R2=1.2x(2000+162)/162=16V
VIN(OV)=VOV(R)x(R3+R4)/R4=1.2x(2000+118)/118=21.5V
Type CTL (H)
>17.1V ouput:1
<17.1V ouput:0
CRADLE
19V/3.5A
IMON: 5A
VPG=VPGTH(R)x(R5+R6)/R6=1.2x(1000+124)/124=10.88V
VIN(UV)=VUVLO(R)x(R1+R2)/R2=1.2x(2000+162)/162=16V
VIN(OV)=VOV(R)x(R3+R4)/R4=1.2x(2000+118)/118=21.5V
DT Research
DC IN/Charger
TY301
Date: Friday, Mar 21, 2021
Sheet 38 of 47