Automotive Reverse Polarity Protection Controller with Overvoltage Protection For 12-V & 24-V Batteries

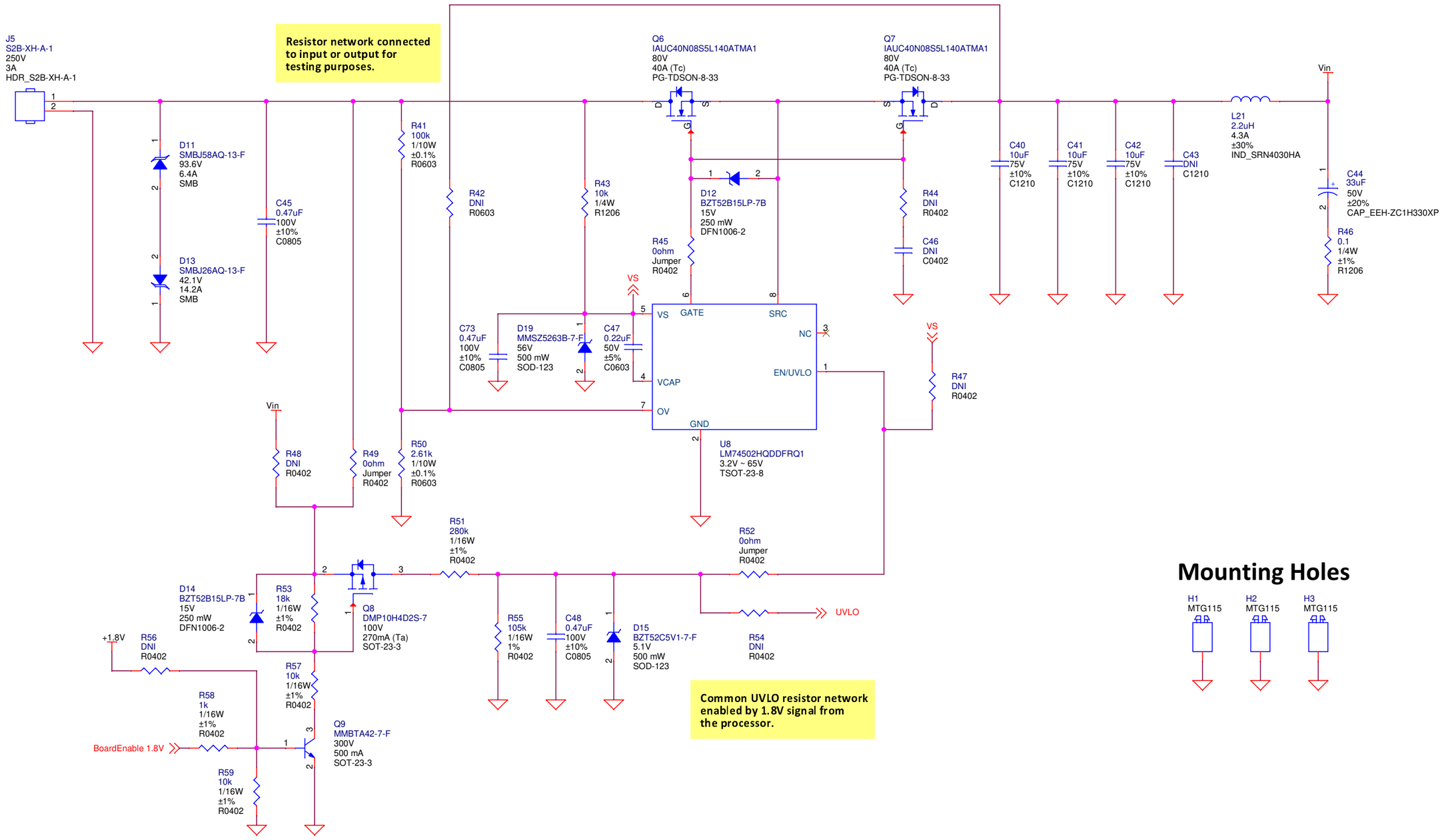

Mounting Holes

Title	Input Protection	
Size A3	Document Number <Doc>	Rev A
Date: Thursday, April 17, 2025	Sheet 6 of 7	