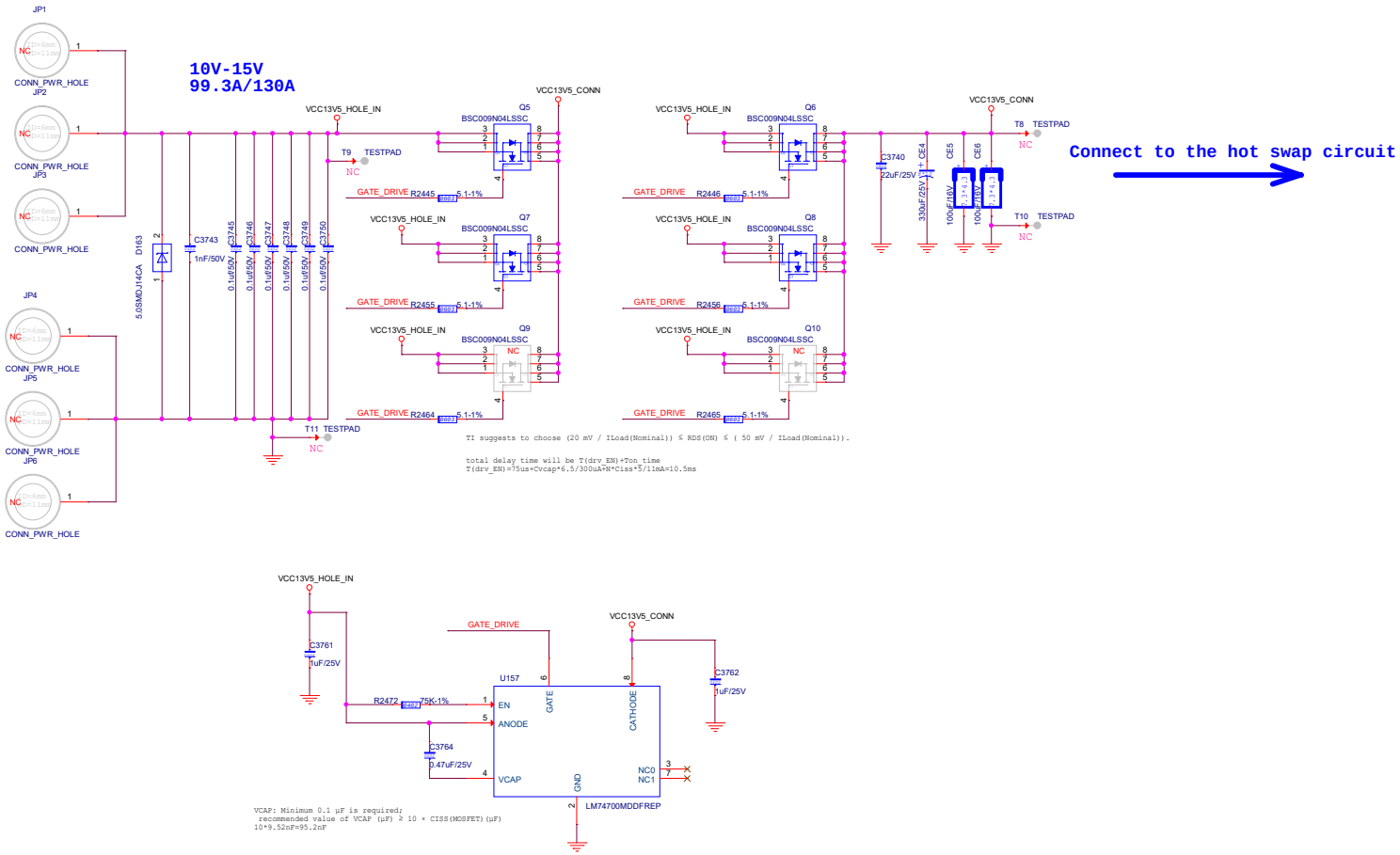

Semptian Co., Ltd.			
Page Name	P_VCC13V5		
Size C	Project Name YL8008	Designer:xjf	Rev V1.0
Date: Monday, March 11, 2024	Sheet 118 of 137		

PROPERTY NOTE: this document contains information confidential and property to Semptian and shall not be reproduced or transferred to other documents or disclosed to others or used for any purpose other than that for which it was obtained without the expressed written consent of Semptian