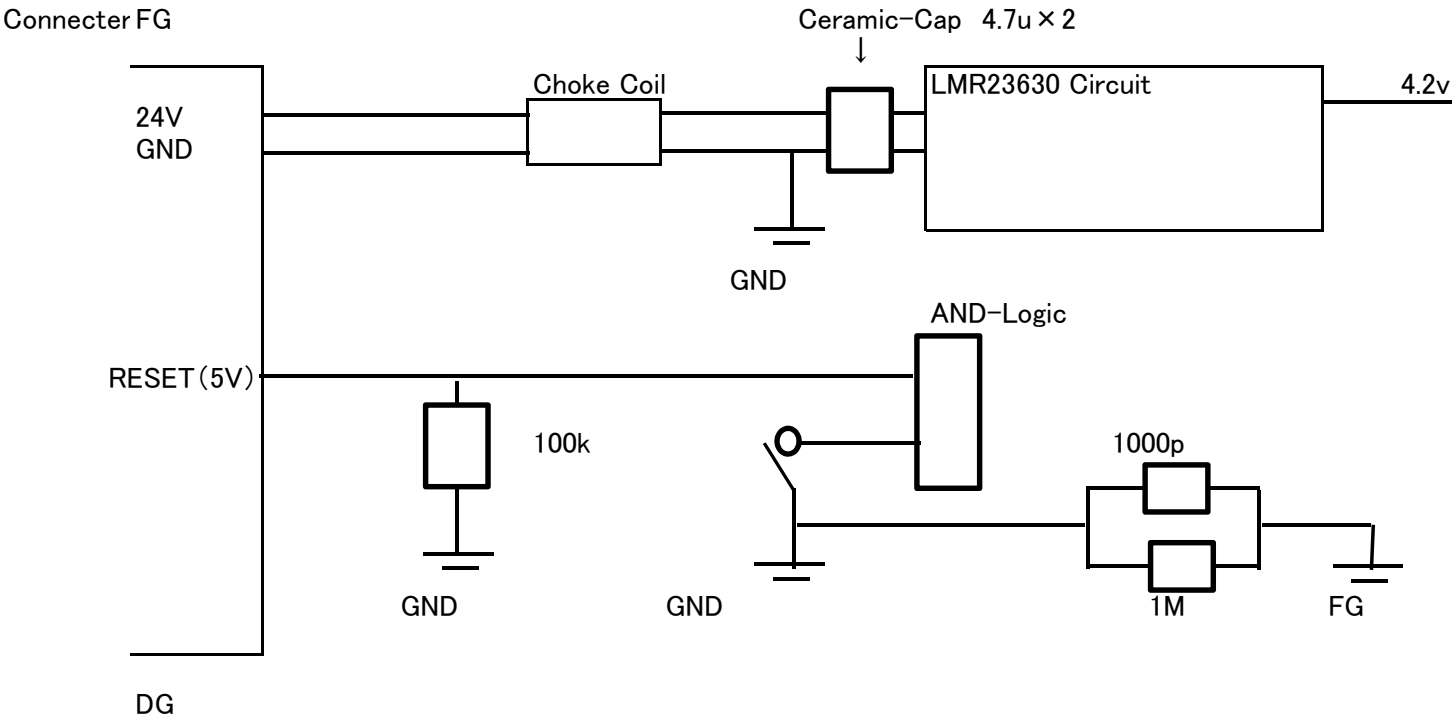

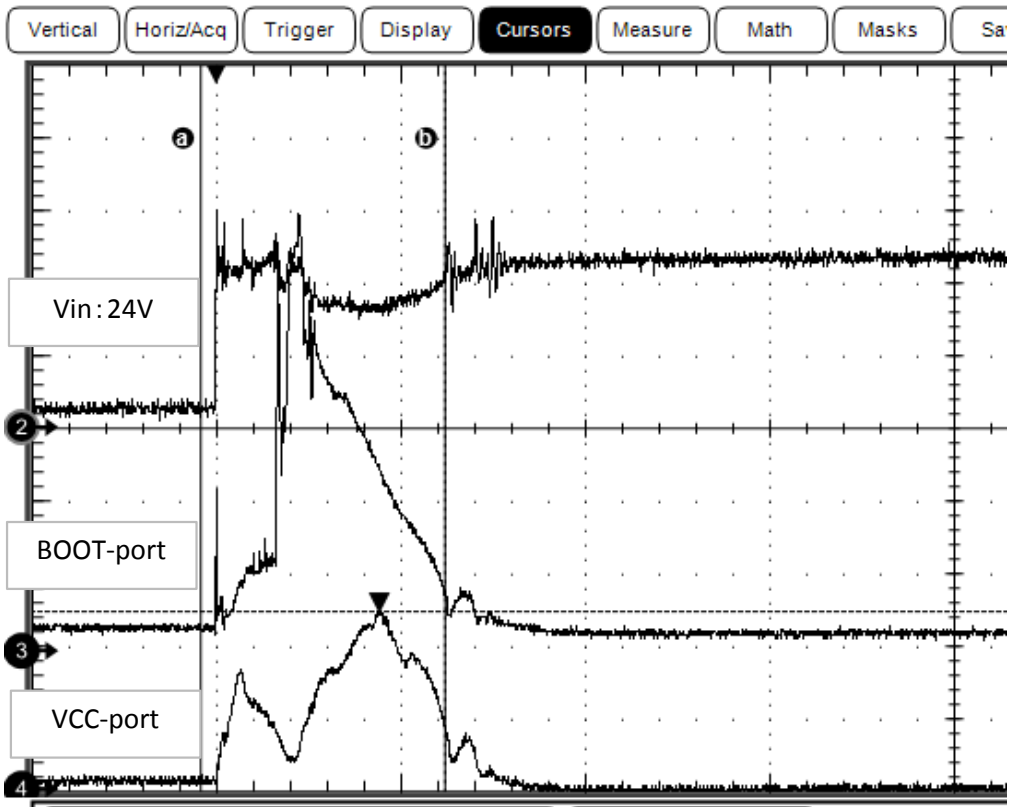

C2	10.0V/div	1MΩ	BW:500M
C3	5.0V/div	1MΩ	BW:500M
C4	3.0V/div	1MΩ	BW:500M

t1	-17.555μs
t2	247.445μs
Δt	265μs
1/Δt	3.774kHz

		Value	Mean	Min	Max	St Dev	Count
C1	Max	1.2V	1.1999996	1.2	1.2	0.0	1.0
C2	Max	29.8V	29.8	29.8	29.8	0.0	1.0
C3	Max	30.1V	30.099999	30.1	30.1	0.0	1.0
C4	Max*	7.32V	7.3200001	7.32	7.32	0.0	1.0