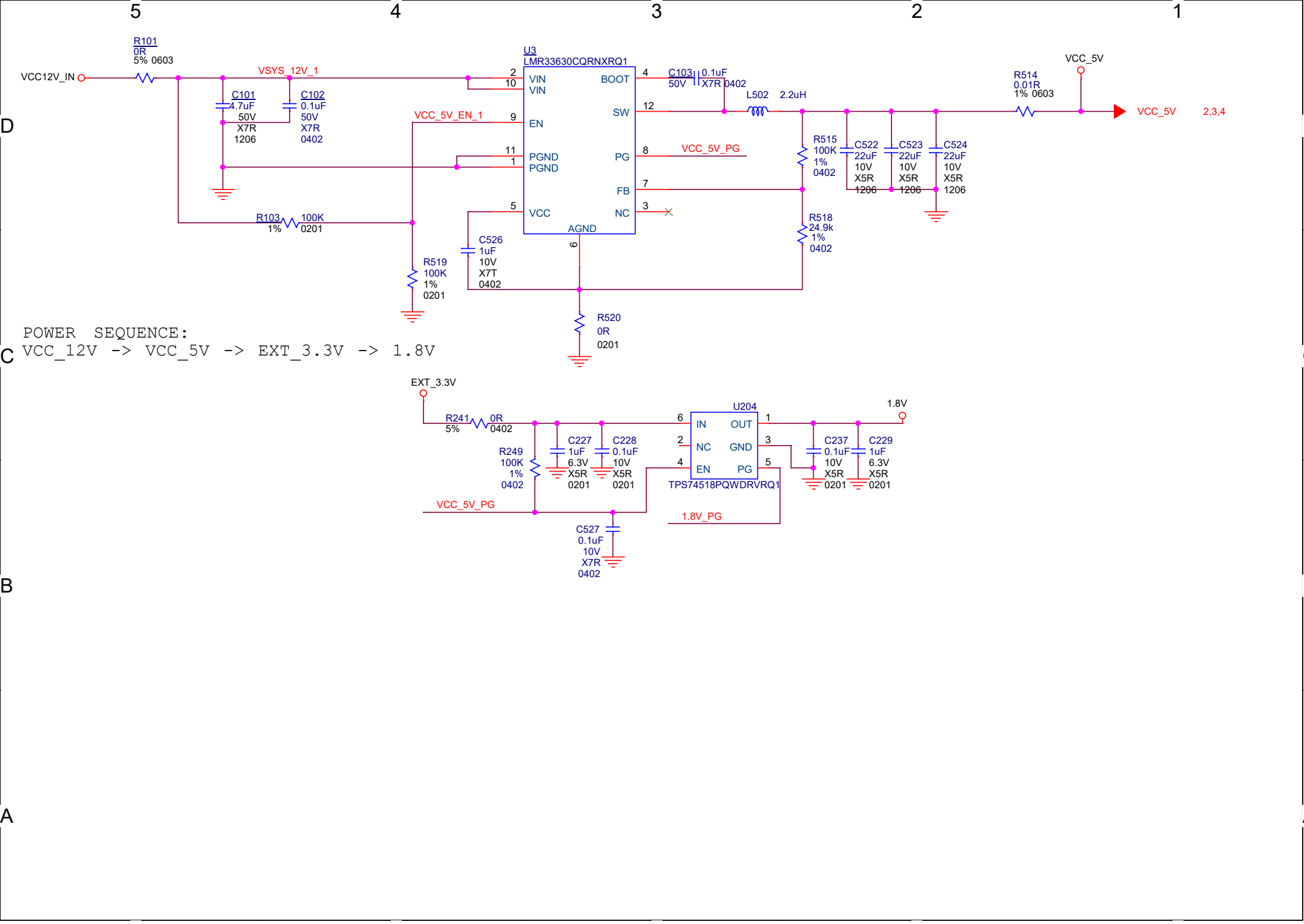
5
4
3
2
1
D
C
B
A
R101
0R
5% 0603
VCC12V_IN
VSYS_12V_1
C101
4.7uF
50V
X7R
1206
C102
0.1uF
50V
X7R
0402
U3
LMR33630CQRNXRQ1
VIN
VIN
EN
PGND
PGND
VCC
BOOT
SW
PG
FB
NC
AGND
VCC_5V_EN_1
VCC_5V_PG
C103
0.1uF
50V
X7R 0402
L502
2.2uH
R514
0.01R
1% 0603
VCC_5V
VCC_5V
2,3,4
R515
100K
1%
0402
C522
22uF
10V
X5R
1206
C523
22uF
10V
X5R
1206
C524
22uF
10V
X5R
1206
R518
24.9k
1%
0402
R103
1%
100K
0201
C526
1uF
10V
X7T
0402
R519
100K
1%
0201
R520
0R
0201
POWER SEQUENCE:
VCC_12V -> VCC_5V -> EXT_3.3V -> 1.8V
EXT_3.3V
R241
5%
0R
0402
R249
100K
1%
0402
C227
1uF
6.3V
X5R
0201
C228
0.1uF
10V
X5R
0201
U204
IN
NC
EN
OUT
GND
PG
TPS74518PQWDRVRQ1
1.8V
C237
0.1uF
10V
X5R
0201
C229
1uF
6.3V
X5R
0201
VCC_5V_PG
1.8V_PG
C527
0.1uF
10V
X7R
0402