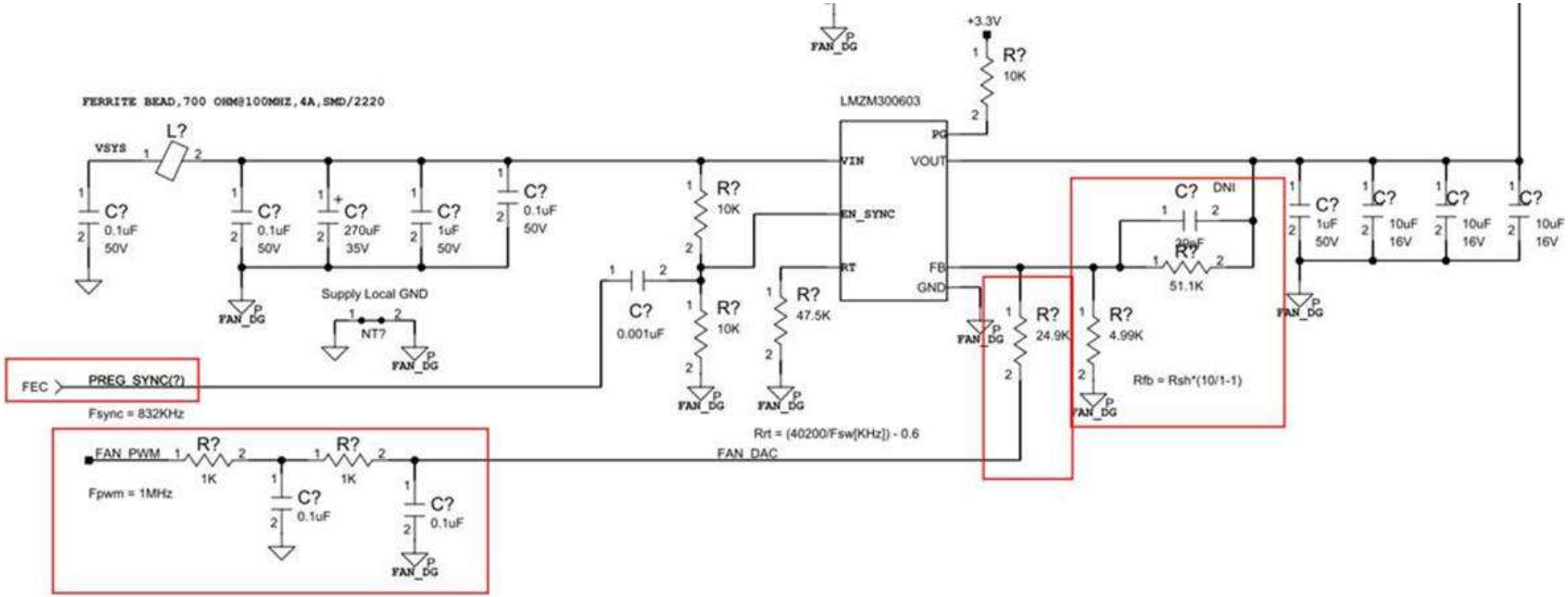
FERRITE BEAD,700 OHM@100MHZ,4A,SMD/2220
VSYS
L?
C? 0.1uF 50V
C? 0.1uF 50V
C? 270uF 35V
C? 1uF 50V
C? 0.1uF 50V
Supply Local GND
NT?
FAN_DG
FEC
PREG_SYNC(?)
Fsync = 832KHz
FAN_PWM
R? 1K
R? 1K
C? 0.1uF
C? 0.1uF
Fpwm = 1MHz
C? 0.001uF
R? 10K
R? 10K
R? 47.5K
Rrt = (40200/Fsw[KHz]) - 0.6
FAN_DAC
LMZM300603
VIN
EN_SYNC
RT
PG
VOUT
FB
GND
+3.3V
R? 10K
R? 24.9K
R? 4.99K
C? DNI
R? 51.1K
Rfb = Rsh*(10/1-1)
C? 1uF 50V
C? 10uF 16V
C? 10uF 16V
C? 10uF 16V