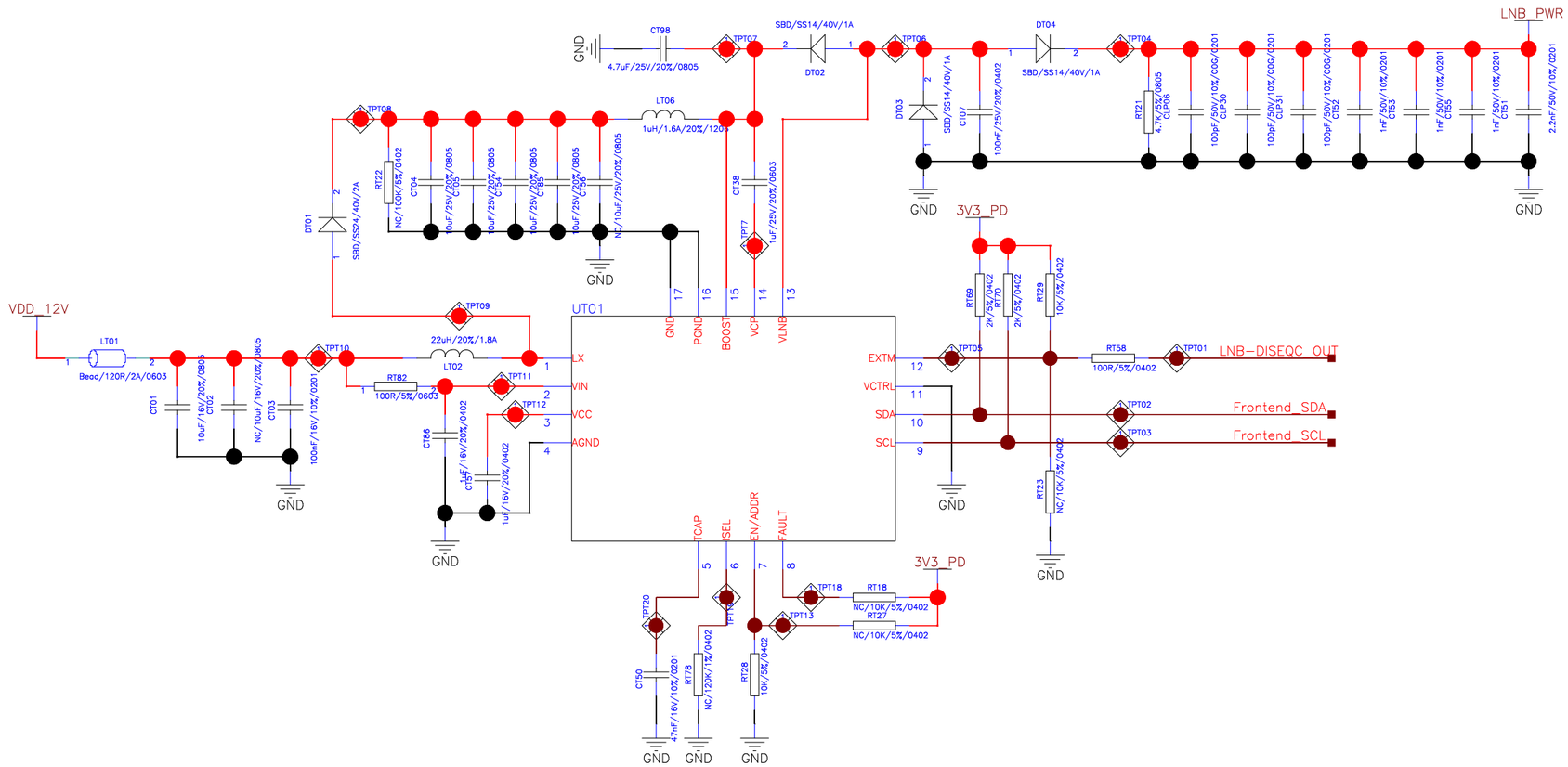

COMPANY:	Skyworth
TITLE:	08_LNB
PCB NO:	5800-2AHSM1A-1202
SIZE: B	AUTHOR: ZuoJian
DATE: 20/03/2023:10:58	SHEET 8 OF 15