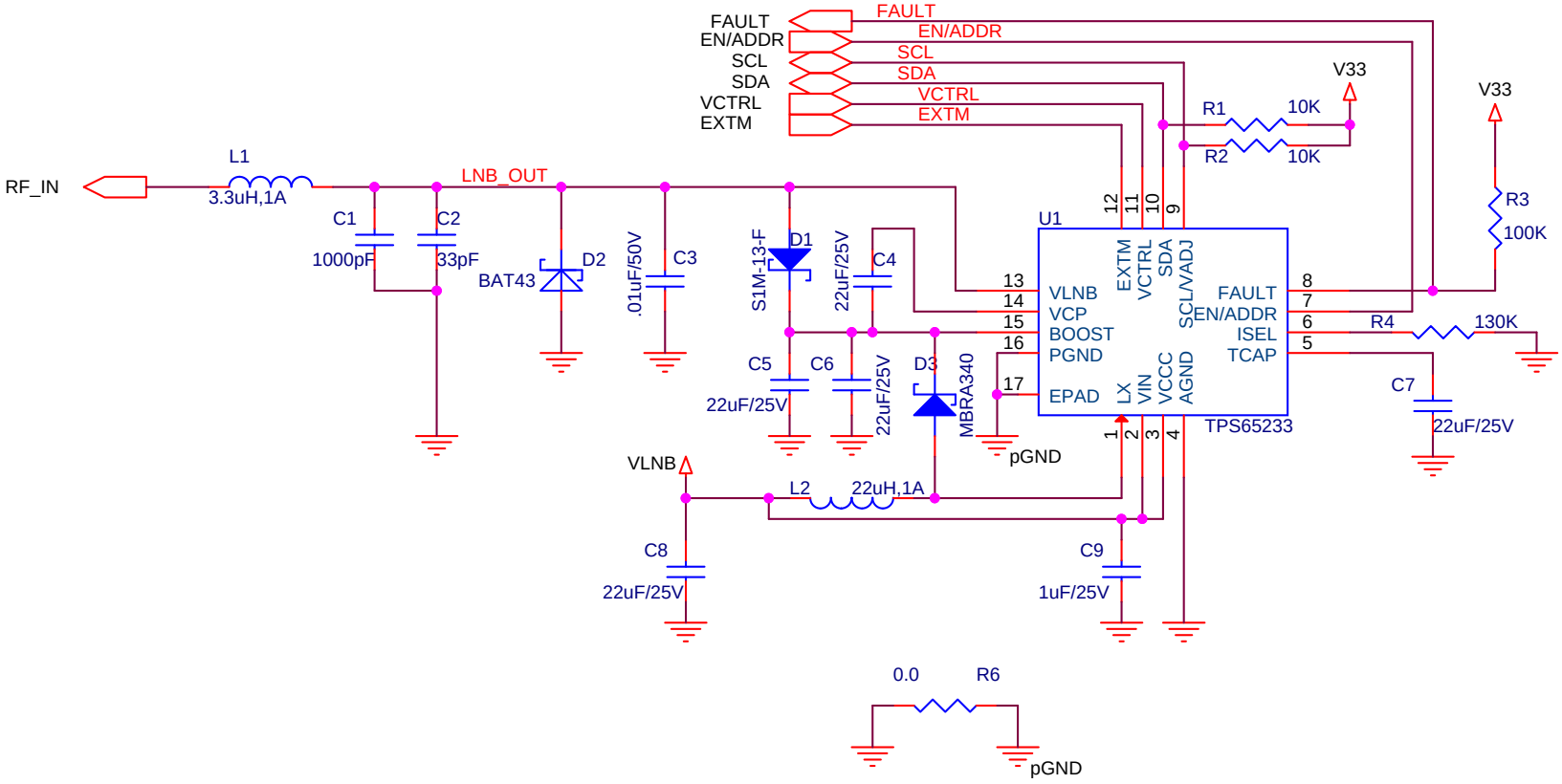

Title <Title>		
Size A	Document Number <Doc>	Rev <RevCo
Date: Friday, March 31, 2017	Sheet 1 of 1	