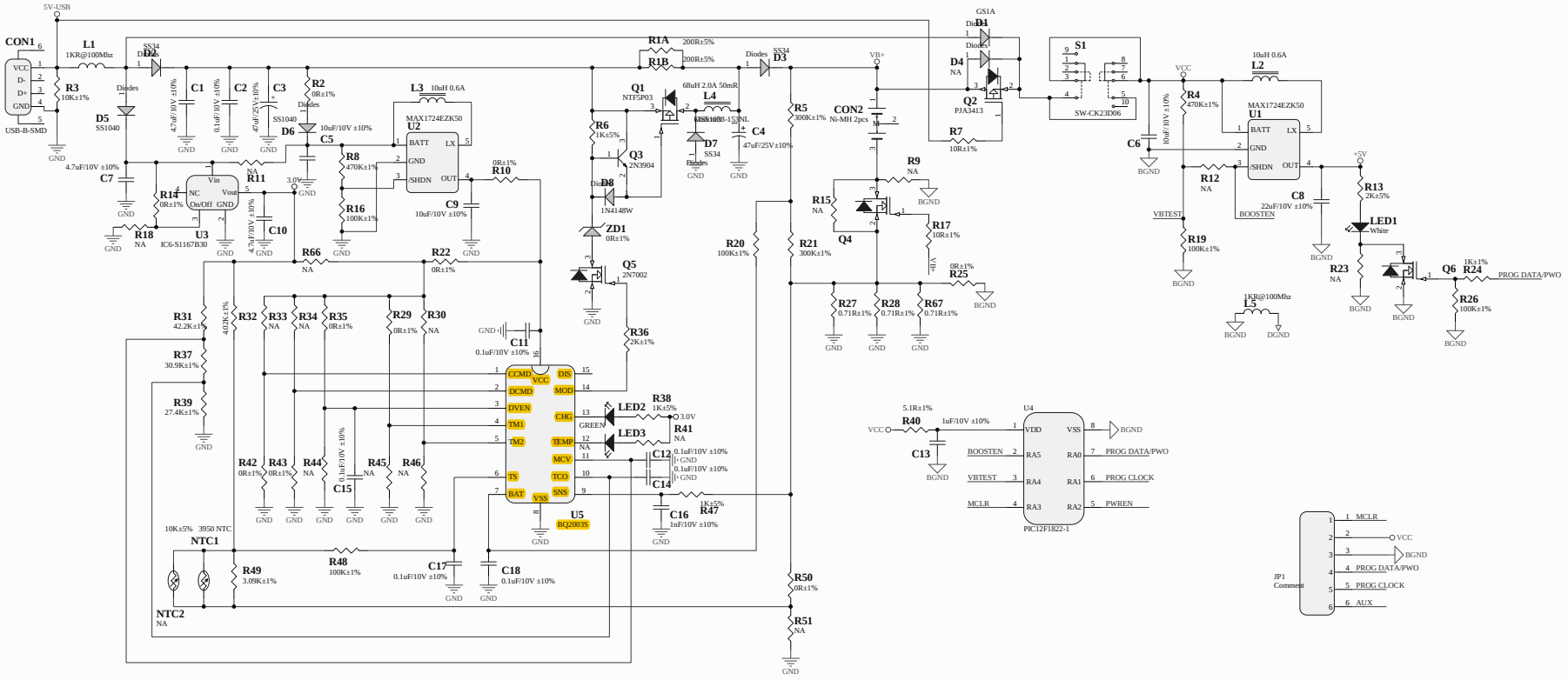

Title		
Size A2	Number	Revision
Date: 2017/12/28	Sheet of	
File: F:\Lance design\..\LW-OS003-I.SchDoc	Drawn By:	