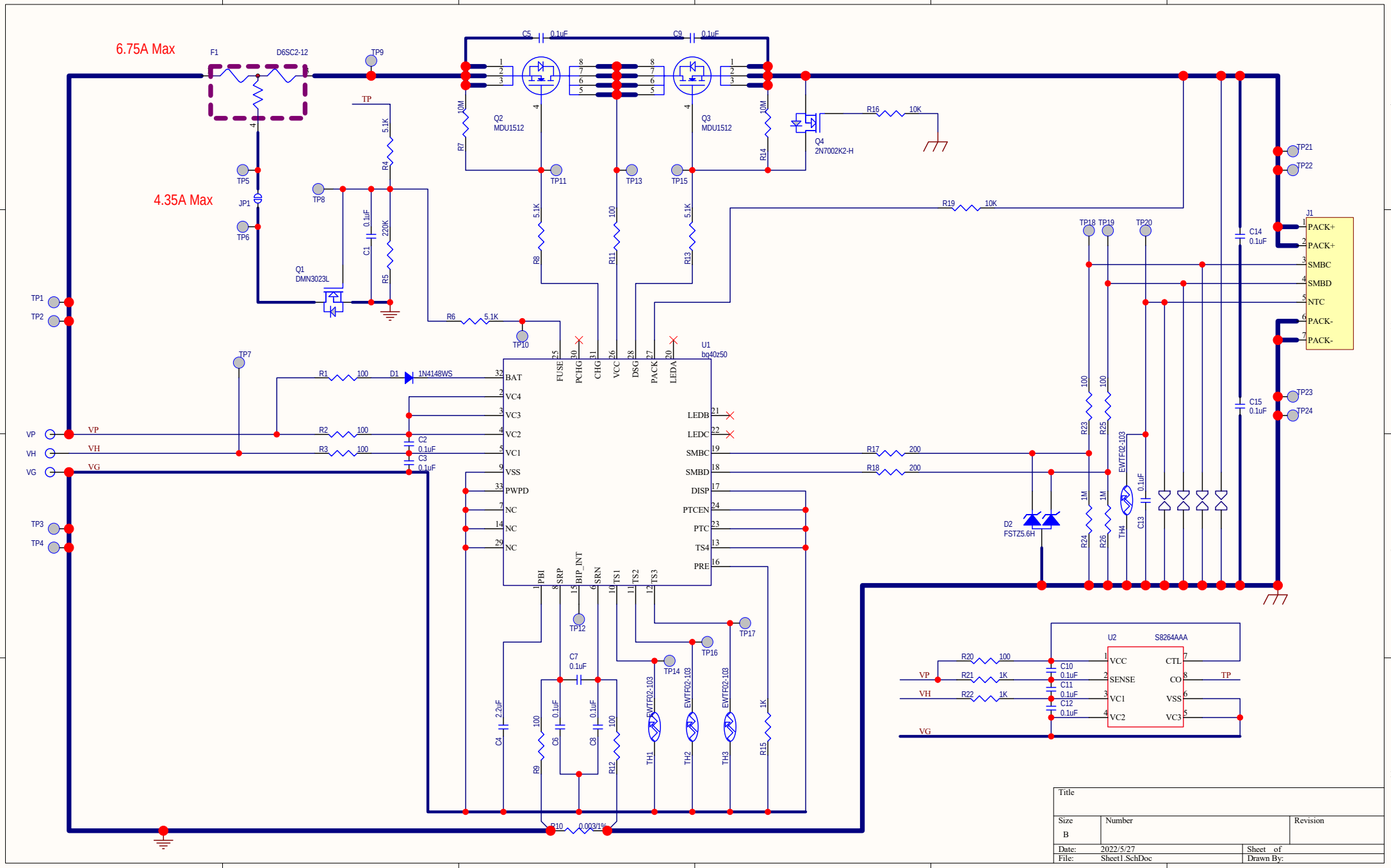
6.75A Max
4.35A Max
F1
D6SC2-12
TP9
TP
C5 0.1uF
C9 0.1uF
Q2 MDU1512
Q3 MDU1512
Q4 2N7002K2-H
R16 10K
R19 10K
R7 10M
R14 10M
R4 5.1K
R5 220K
C1 0.1uF
Q1 DMN3023L
JP1
TP5
TP6
TP8
TP11
TP13
TP15
R8 5.1K
R11 100
R13 5.1K
R6 5.1K
TP10
TP7
R1 100
D1 1N4148WS
R2 100
R3 100
C2 0.1uF
C3 0.1uF
U1 bq40z50
BAT
VC4
VC3
VC2
VC1
VSS
PWPD
NC
FUSE
PCHG
CHG
VCC
DSG
PACK
LEDA
LEDB
LEDC
SMBC
SMBD
DISP
PTCEN
PTC
TS4
PRE
PBI
SRP
BIP_INT
SRN
TS1
TS2
TS3
TP12
TP14
TP16
TP17
C7 0.1uF
C4 2.2uF
R9 100
C6 0.1uF
C8 0.1uF
R12 100
TH1 EWTF02-103
TH2 EWTF02-103
TH3 EWTF02-103
R15 1K
R10 0.003/1%
VP
VH
VG
TP1
TP2
TP3
TP4
TP18
TP19
TP20
R17 200
R18 200
R23 100
R25 100
R24 1M
R26 1M
D2 FSTZ5.6H
TH4 EWTF02-103
C13 0.1uF
C14 0.1uF
C15 0.1uF
TP21
TP22
TP23
TP24
J1
PACK+
PACK+
SMBC
SMBD
NTC
PACK-
PACK-
U2 S8264AAA
VCC
SENSE
VC1
VC2
CTL
CO
VSS
VC3
R20 100
R21 1K
R22 1K
C10 0.1uF
C11 0.1uF
C12 0.1uF
TP
Title
Size B
Number
Revision
Date: 2022/5/27
File: Sheet1.SchDoc
Sheet of
Drawn By: