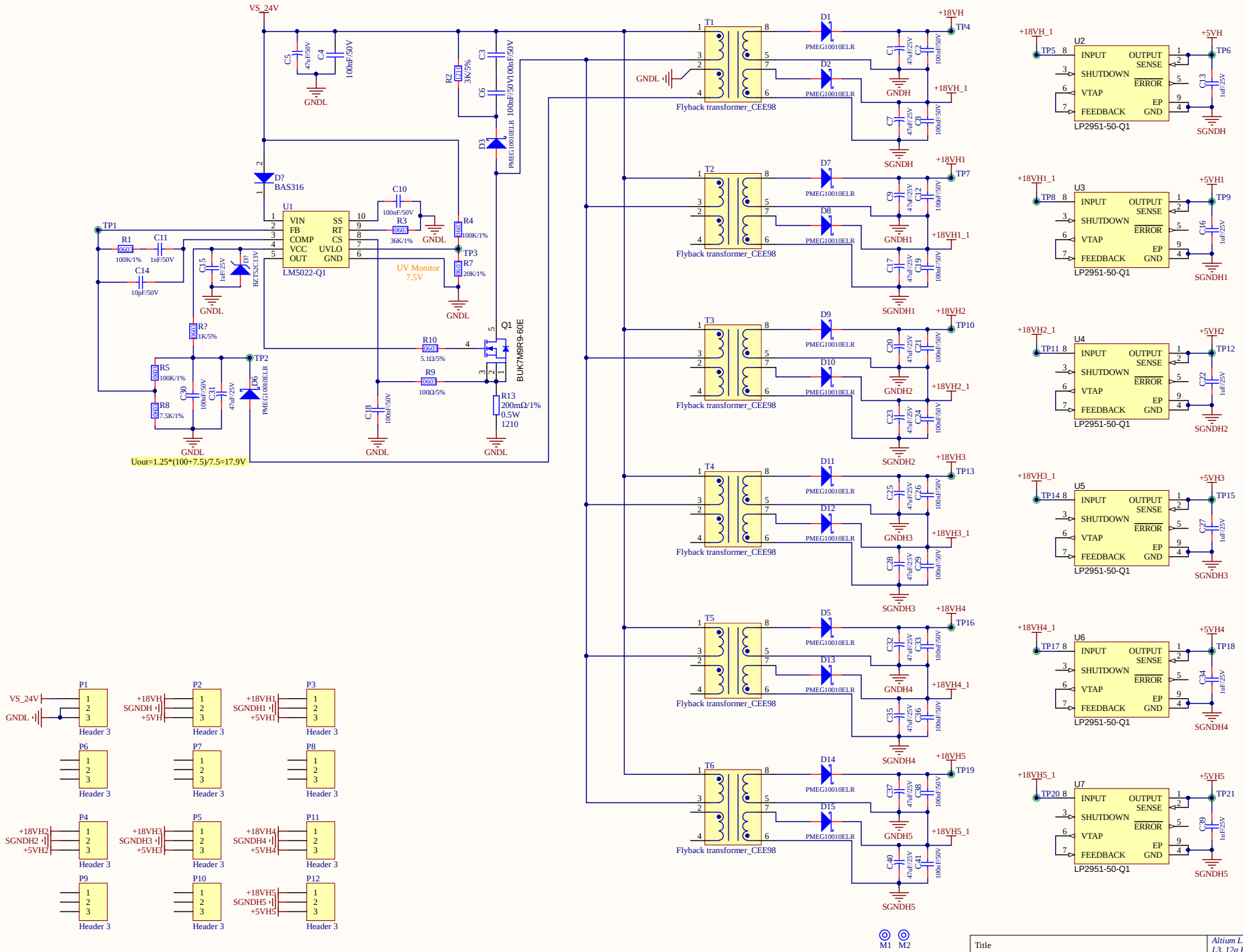

Title		
Size: A3	Number:	Revision:
Date: 2018/9/13	Time: 16:32:06	Sheet of
File: C:\Users\Bingo\Desktop\国轩项目\MINI_ISO_Power_supply\MINI_ISO_Power supply.SchDoc		

Altium Limited
L3, 12a Rodborough Rd
Frenchs Forest
NSW
Australia 2086