EMC protection

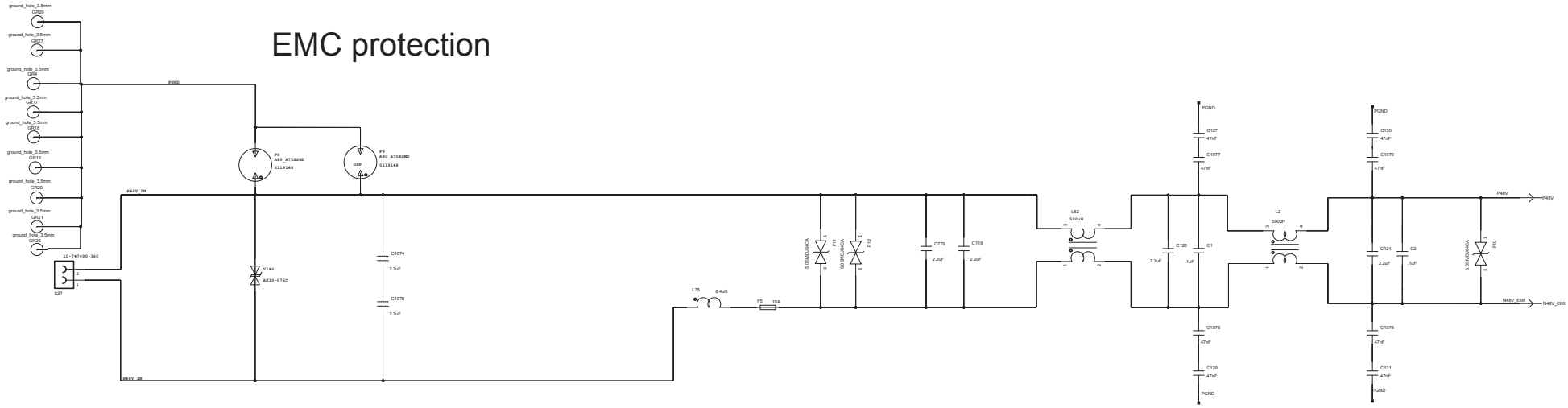

Reverse protection and Hot Swap

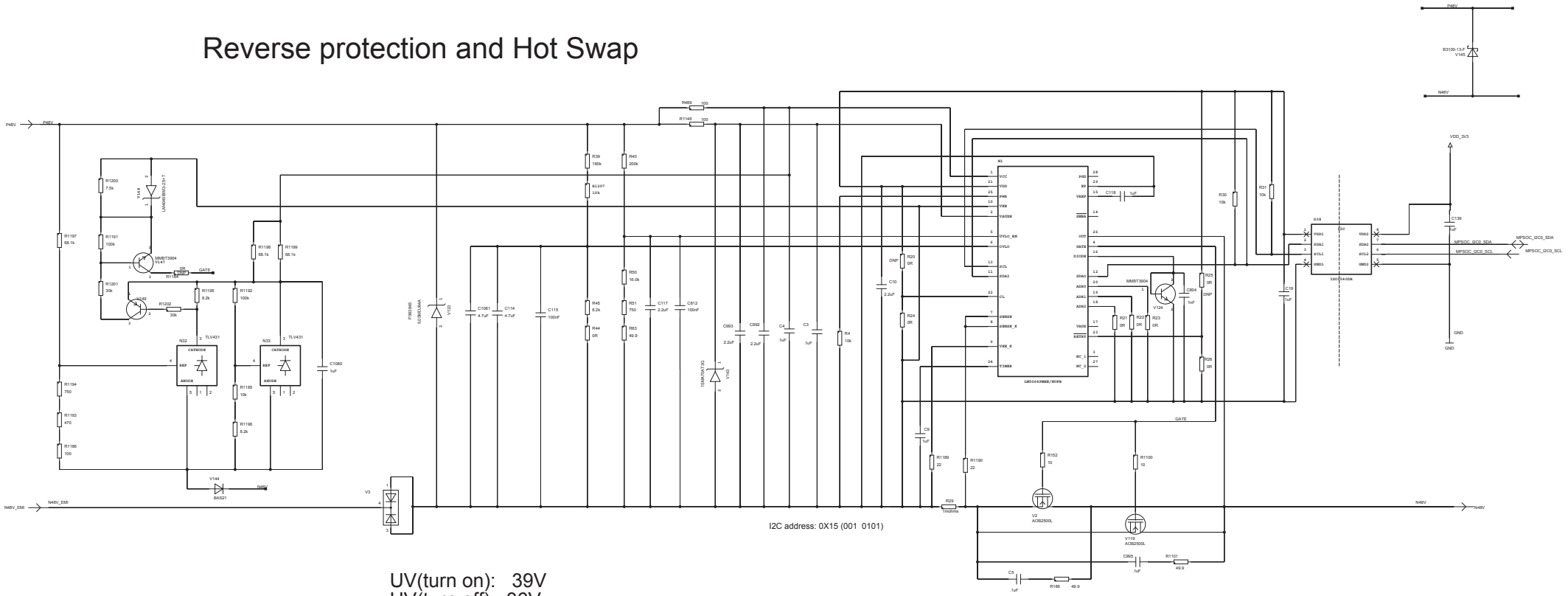

UV(turn on): 39V
UV(turn off): 36V
OV(turn on): 57V
OV(turn off): 60V

Title: MOHA POWER_EMC and Hot-Swap		
Ref. 986355X4	Draw HW2_SH 1.20.18	B3B 089331A.X21
Sheet 2 / 43	Des. HW2_SH 1.20.18	

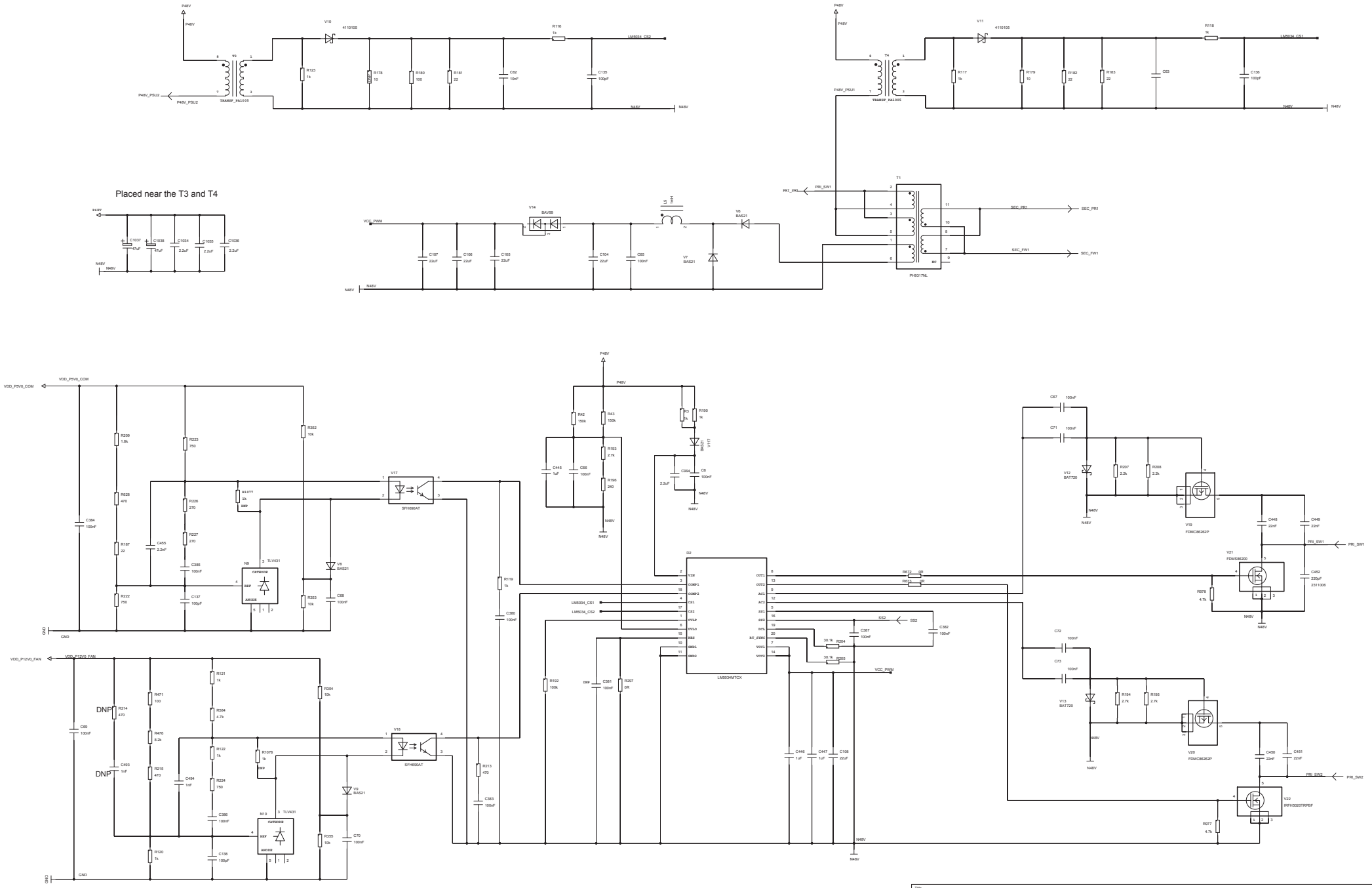

Title	MOHA POWER_PRIMARY_5V
Ref. 986355X4	Draw HW2_SH 1.20.18
Sheet 3 / 43	Des. HW2_SH 1.20.18
	B3B 089331A.X21

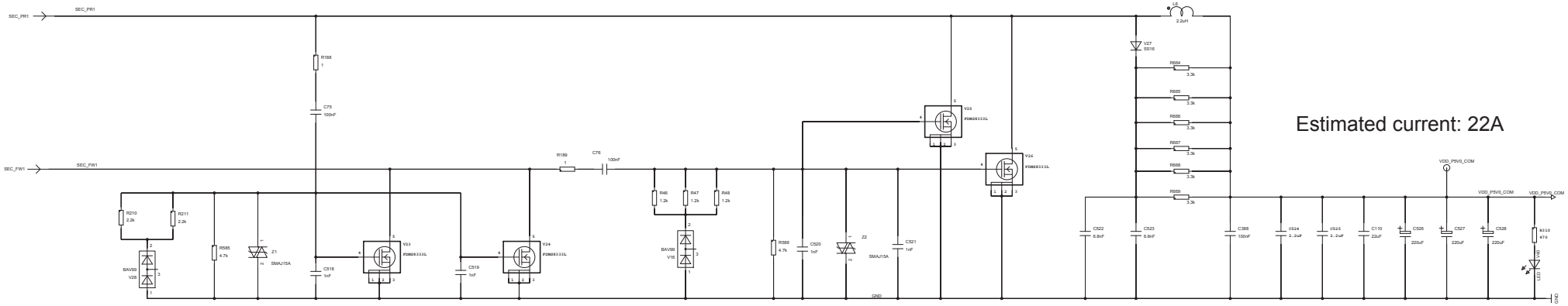

Estimated current: 22A

Estimated current: 2A

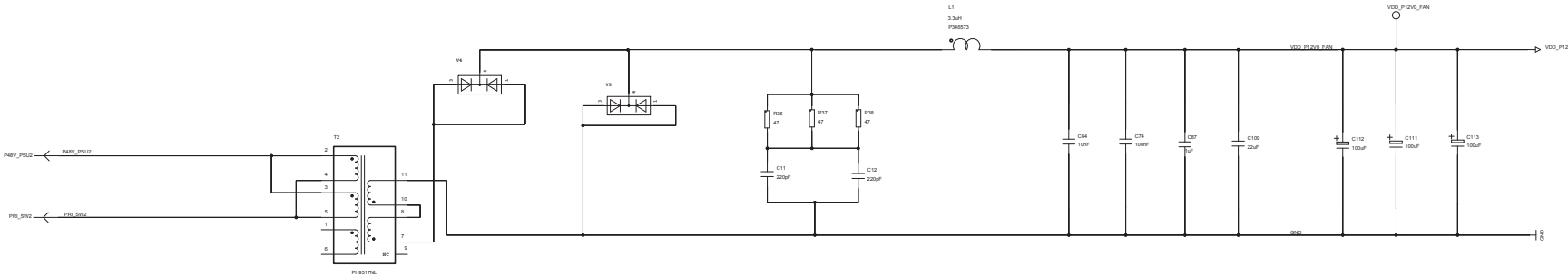

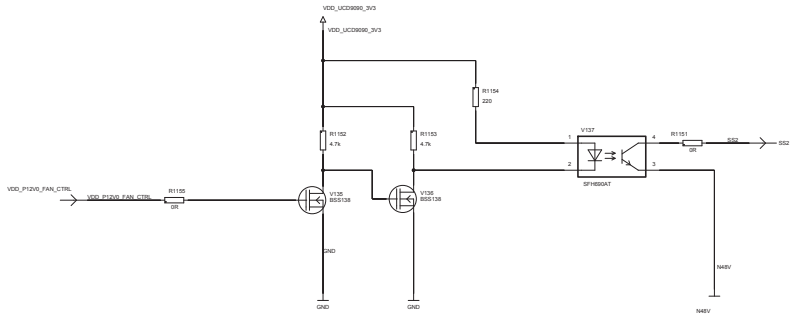

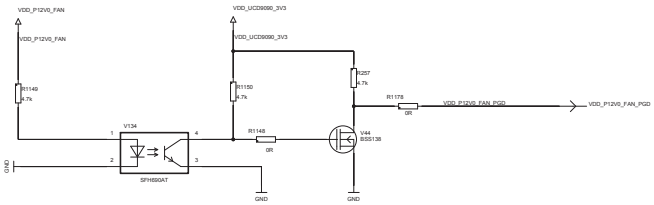

CPLD_FAN_CTL	SS2
1	1
0	0

Title: MOHA POWER_SECONDARY_5V/12V		
Ref. 986355X4	Draw HW2_SH 1.20.18	B3B 089331A.X21
Sheet 4 / 43	Des. HW2_SH 1.20.18	