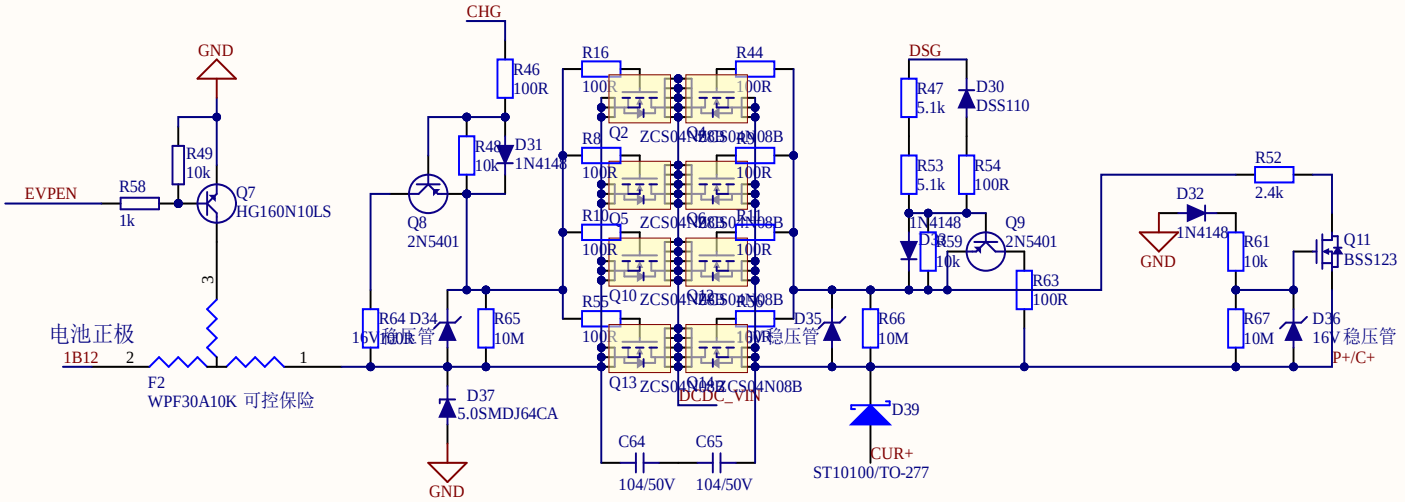

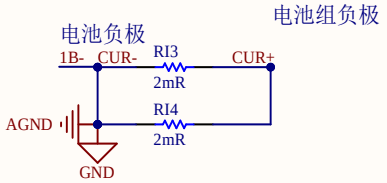

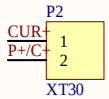

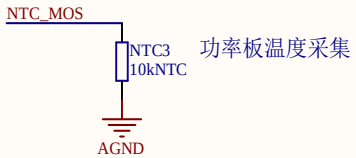

Title		
Size A4	Number	Revision
Date: 11/04/2024		Sheet of
File: \\..\MOS_dfn.SchDoc		Drawn By: