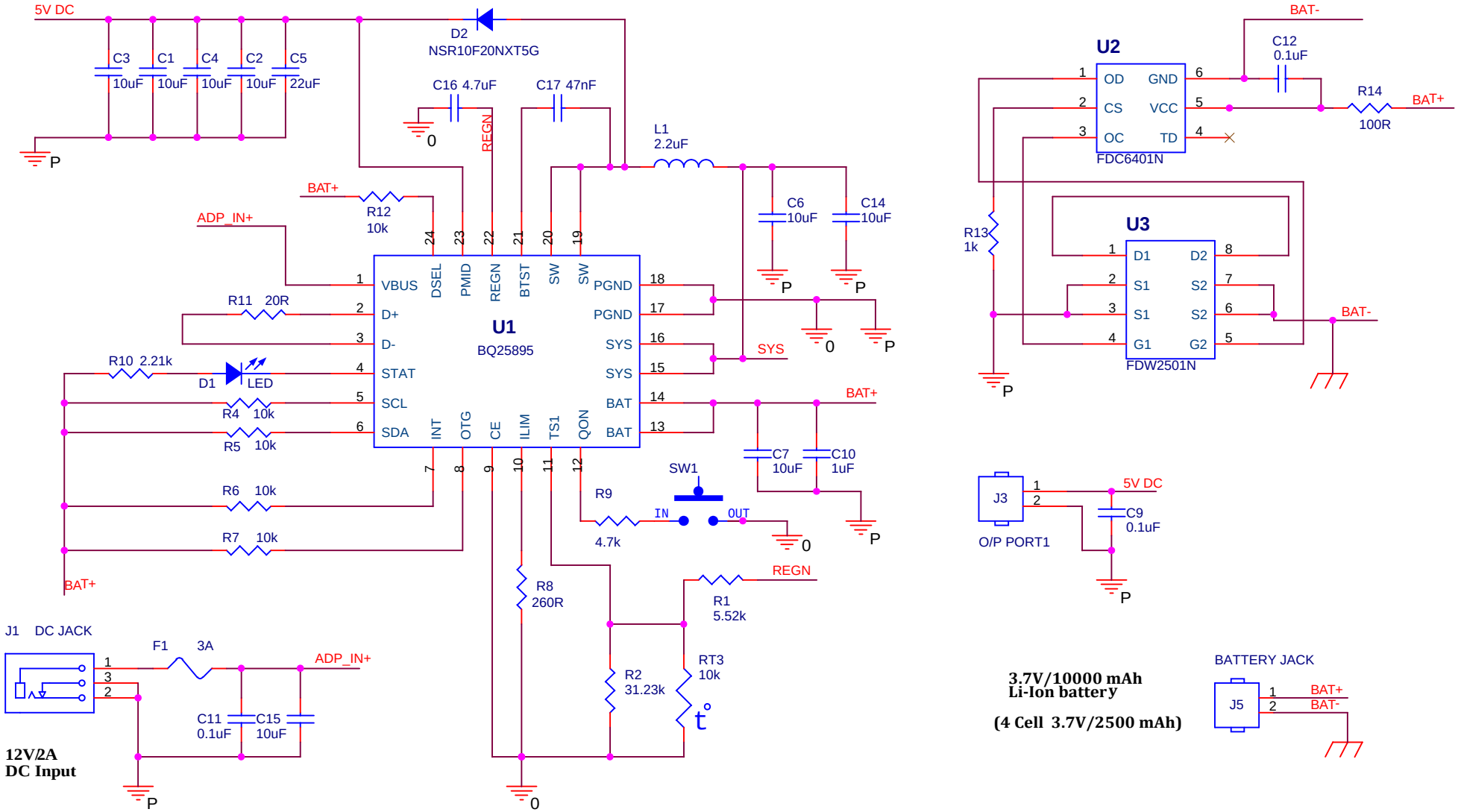

Title		
Size	Document Number	Rev
	Design & Review By Haresh	
Date: Friday, August 05, 2016	Sheet 1 of 1	