ON: AC → DC

OFF: AC → DC → Load

Using the EVM with UCC25603

① Remove R11, D4
② U1 pin 1 to PGND
③ TP21 ← 11.25 ~ 16(V)
④ Replace to UCC25603

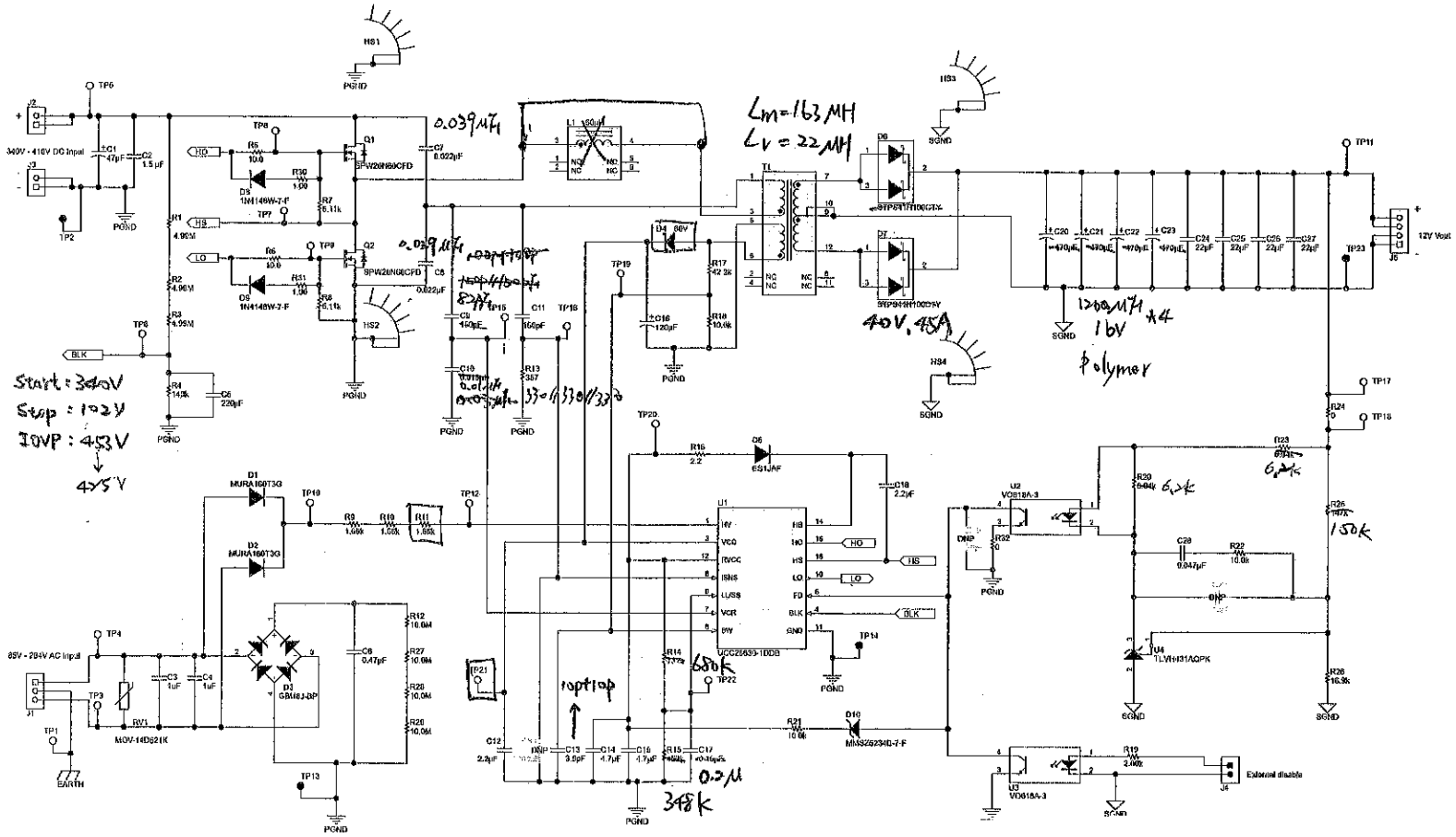

Figure 1. UCC25630-1EVM-291 Schematic

Copyright © 2017, Texas Instruments Incorporated