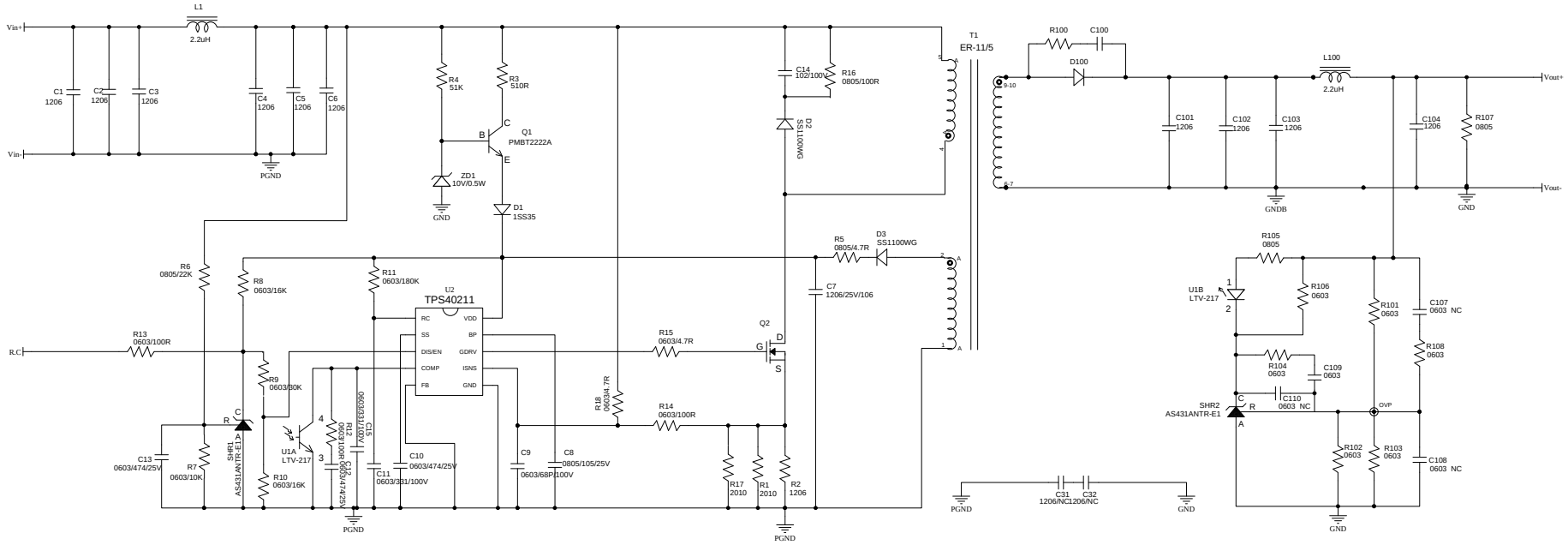

SCW05/08 DIFFERENT COMPONENT:

Model \ Part No.	C1	C2	C3	C4	C5	C100	C101	C102	C103	C104	C109	R3	R4	R6	R7	R100	R101	R102	R103	R104	R105	R106	D100	Q2					
SCWNA08-3.3	50V/475	50V/475	50V/475	50V/475	50V/475	100V/102	10V/226	10V/226	10V/226	10V/226	25V/474	510R	51K	22K	10K	5.1R	3.9K	12.1K	1M										
SCWNA08-5	50V/475	50V/475	50V/475	50V/475	50V/475	100V/102	10V/226	10V/226	10V/226	10V/226	25V/474	510R	51K	22K	10K	10R	12K	12K	1M										
SCWNA08-12	50V/475	50V/475	50V/475	50V/475	50V/475	1KV/471	16V/106	16V/106	16V/106	16V/106	25V/224	510R	51K	22K	10K	51R	44K	12.4K	150K										
SCWNA08-15	50V/475	50V/475	50V/475	50V/475	50V/475	1KV/471	25V/106	25V/106	25V/106	25V/106	25V/224	510R	51K	22K	10K	100R	59K	12.1K	470K										
SCWNA08-24	50V/475	50V/475	50V/475	50V/475	50V/475	1KV/221	50V/475	50V/475	50V/475	50V/475	25V/104	510R	51K	22K	10K	100R	100K	12K	330K										
SCWNB08-3.3	100V/105	100V/105	100V/105	100V/105	100V/105	100V/102	10V/226	10V/226	10V/226	10V/226	25V/474	1K	100K	51K	9.1K	5.1R	3.9K	12.1K	1M										
SCWNB08-5	100V/105	100V/105	100V/105	100V/105	100V/105	100V/102	10V/226	10V/226	10V/226	10V/226	25V/474	1K	100K	51K	9.1K	10R	12K	12K	1M										
SCWNB08-12	100V/105	100V/105	100V/105	100V/105	100V/105	1KV/471	16V/106	16V/106	16V/106	16V/106	25V/224	1K	100K	51K	9.1K	51R	44K	12.4K	150K										
SCWNB08-15	100V/105	100V/105	100V/105	100V/105	100V/105	1KV/471	25V/106	25V/106	25V/106	25V/106	25V/224	1K	100K	51K	9.1K	100R	59K	12.1K	470K										
SCWNB08-24	100V/105	100V/105	100V/105	100V/105	100V/105	1KV/221	50V/475	50V/475	50V/475	50V/475	25V/104	1K	100K	51K	9.1K	100R	100K	12K	330K										

ECN. CORE	DATE	DESCRIPTION	APPROVAL	DESIGNED	CHECKED	DRAWN

MEAN WELL

SUBJECT	SCW05/08		
REVISION	R0	DATE	2016-08-05
FILENAME	SCW05/08.sch		
MEAN WELL ENTERPRISES CO., LTD.	Sheet 1 of 1		