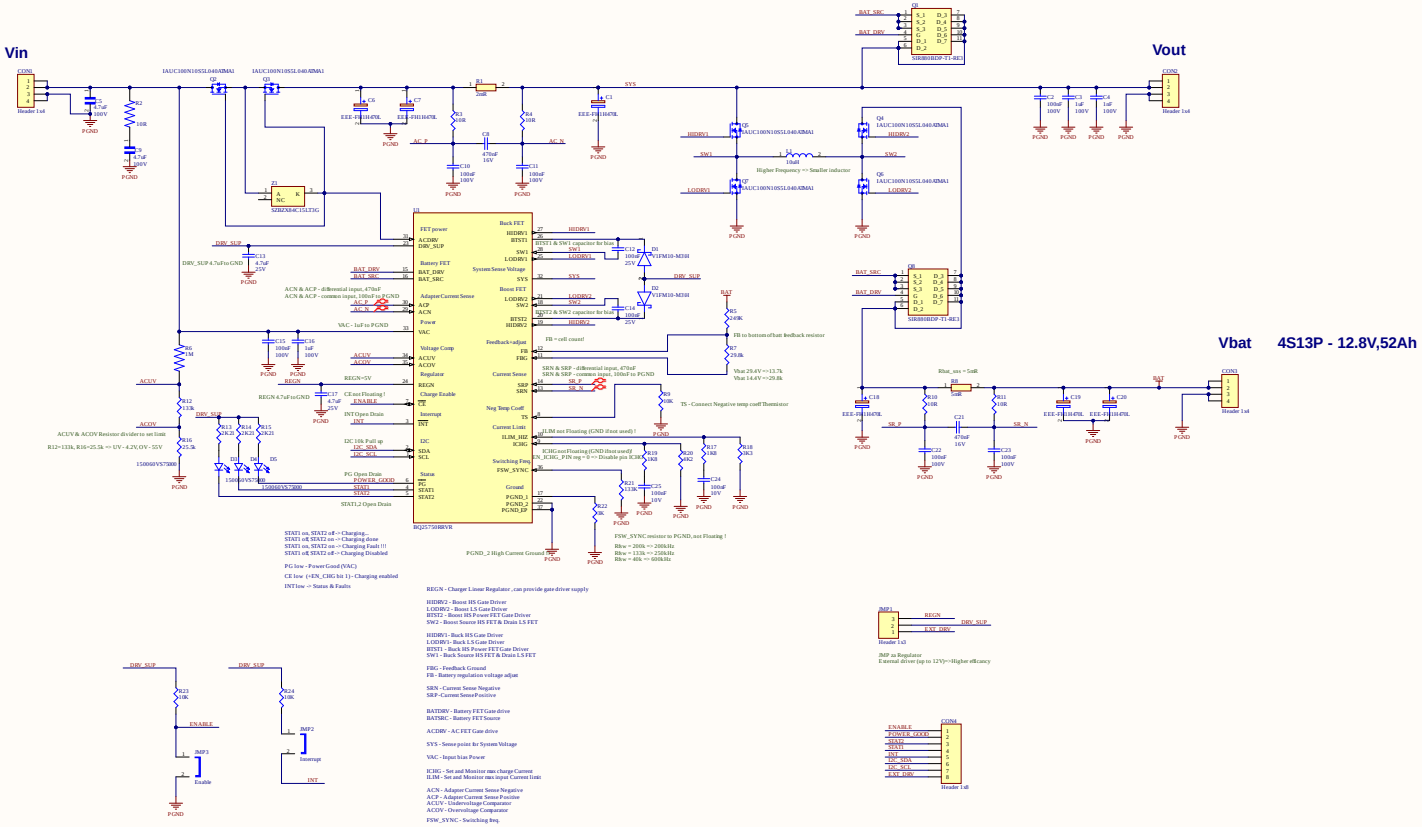
Vin
Vout
Vbat
4S13P - 12.8V,52Ah
BQ25756RVR
Higher Frequency => Smaller inductor
FB to bottom of bat. feedback resistor
TS - Connect Negative temp coeff Thermistor
FSW_SYNC resistor to PGND, not Floating !
Rfsw = 200k => 200kHz
Rfsw = 133k => 250kHz
Rfsw = 40k => 600kHz
STAT1 on, STAT2 off -> Charging...
STAT1 off, STAT2 on -> Charging done
STAT1 on, STAT2 on -> Charging Fault !!!
STAT1 off, STAT2 off -> Charging Disabled
PG low - Power Good (VAC)
CE low (=EN_CHG bit 1)- Charging enabled
INT low -> Status & Faults
REGN - Charge Linear Regulator , can provide gate driver supply
HIDRV2 - Boost HS Gate Driver
LODRV2 - Boost LS Gate Driver
BTST2 - Boost HS Power FET Gate Driver
SW2 - Boost Source HS FET & Drain LS FET
HIDRV1 - Buck HS Gate Driver
LODRV1- Buck LS Gate Driver
BTST1 - Buck HS Power FET Gate Driver
SW1 - Buck Source HS FET & Drain LS FET
FBG - Feedback Ground
FB - Battery regulation voltage adjust
SRN - Current Sense Negative
SRP - Current Sense Positive
BATDRV - Battery FET Gate drive
BATSRC - Battery FET Source
ACDRV - AC FET Gate drive
SYS - Sense point for System Voltage
VAC - Input bias Power
ICHG - Set and Monitor max charge Current
ILIM - Set and Monitor max input Current limit
ACN - Adapter Current Sense Negative
ACP - Adapter Current Sense Positive
ACUV - Undervoltage Comparator
ACOV - Overvoltage Comparator
FSW_SYNC - Switching freq.
JMP1 as Regulator
External driver (up to 12V)=>Higher efficancy

Comment	Description	Designator	Footprint	LibRef	Quantity