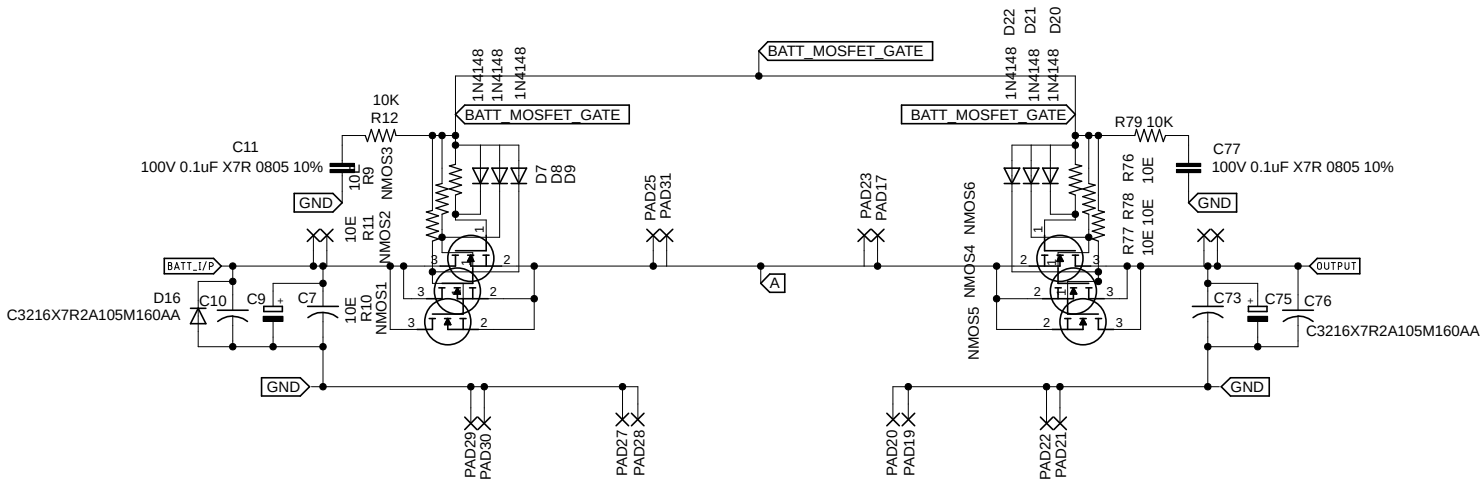
BATT_MOSFET_GATE
BATT_MOSFET_GATE
BATT_MOSFET_GATE
BATT_MOSFET_GATE
1N4148
1N4148
1N4148
D22
D21
D20
1N4148
1N4148
1N4148
10K
R12
C11
100V 0.1uF X7R 0805 10%
10E
R9
NMOS3
GND
10E
R11
NMOS2
BATT_I/P
D16
C3216X7R2A105M160AA
C10
C9
C7
10E
R10
NMOS1
GND
D7
D8
D9
PAD25
PAD31
A
PAD23
PAD17
NMOS4
NMOS6
NMOS5
R79 10K
C77
100V 0.1uF X7R 0805 10%
R76
10E
R78
10E
R77
10E
GND
OUTPUT
C73
C75
C76
C3216X7R2A105M160AA
GND
PAD29
PAD30
PAD27
PAD28
PAD20
PAD19
PAD22
PAD21

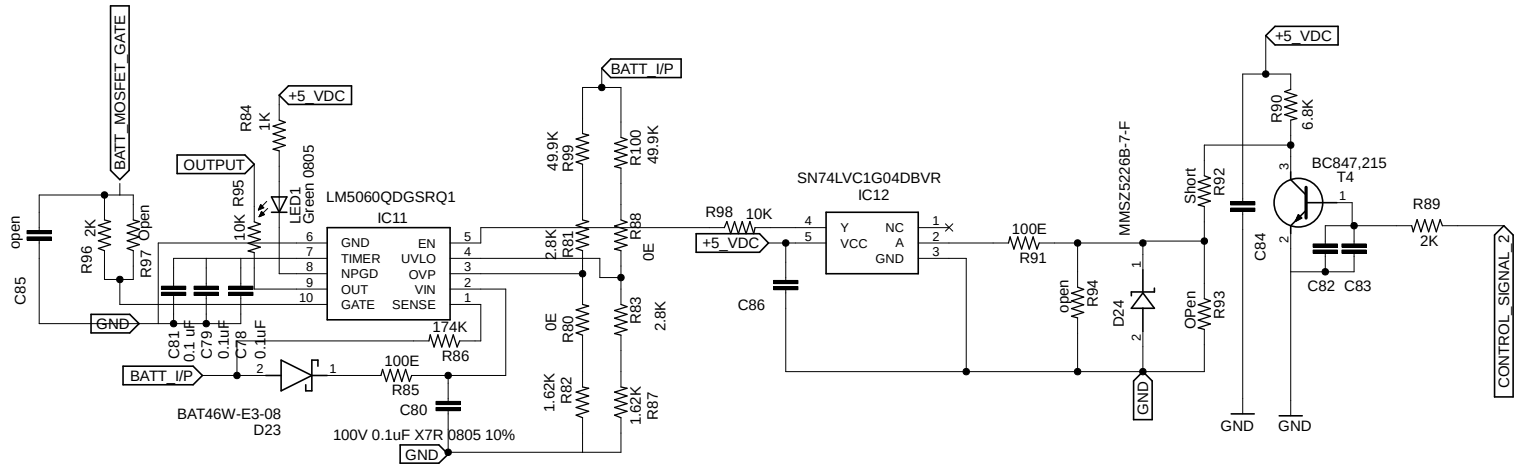
BATT_MOSFET_GATE
open
C85
R96
2K
R97
Open
GND
OUTPUT
R84
1K
+5_VDC
LED1
Green 0805
10K
R95
LM5060QDGSRQ1
IC11
GND
TIMER
NPGD
OUT
GATE
EN
UVLO
OVP
VIN
SENSE
C81
0.1 uF
C79
0.1uF
C78
0.1uF
174K
R86
BATT_I/P
100E
R85
BAT46W-E3-08
D23
C80
100V 0.1uF X7R 0805 10%
GND
BATT_I/P
49.9K
R99
R100
49.9K
2.8K
R81
R88
0E
0E
R80
R83
2.8K
1.62K
R82
1.62K
R87
R98
10K
+5_VDC
C86
SN74LVC1G04DBVR
IC12
Y
VCC
NC
A
GND
100E
R91
open
R94
MMSZ5226B-7-F
D24
GND
Short
R92
OPen
R93
+5_VDC
R90
6.8K
C84
BC847,215
T4
C82
C83
R89
2K
GND
GND
CONTROL_SIGNAL_2