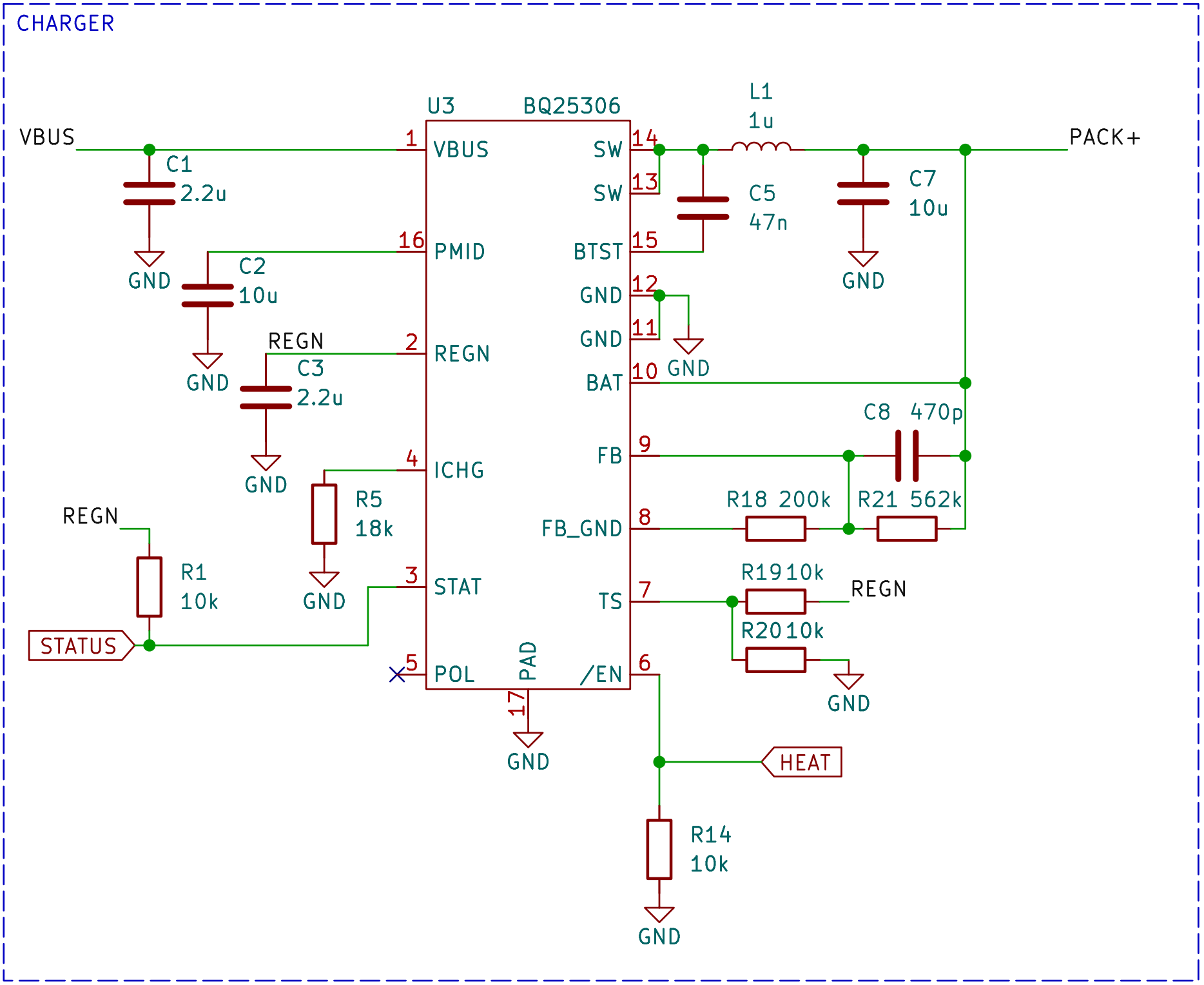
CHARGER
U3
BQ25306
VBUS
C1
2.2u
GND
C2
10u
REGN
C3
2.2u
R5
18k
R1
10k
STATUS
1
VBUS
16
PMID
2
REGN
4
ICHG
3
STAT
5
POL
PAD
17
14
SW
13
SW
15
BTST
12
GND
11
GND
10
BAT
9
FB
8
FB_GND
7
TS
6
/EN
L1
1u
C5
47n
C7
10u
PACK+
C8 470p
R18 200k
R21 562k
R1910k
R2010k
HEAT
R14
10k