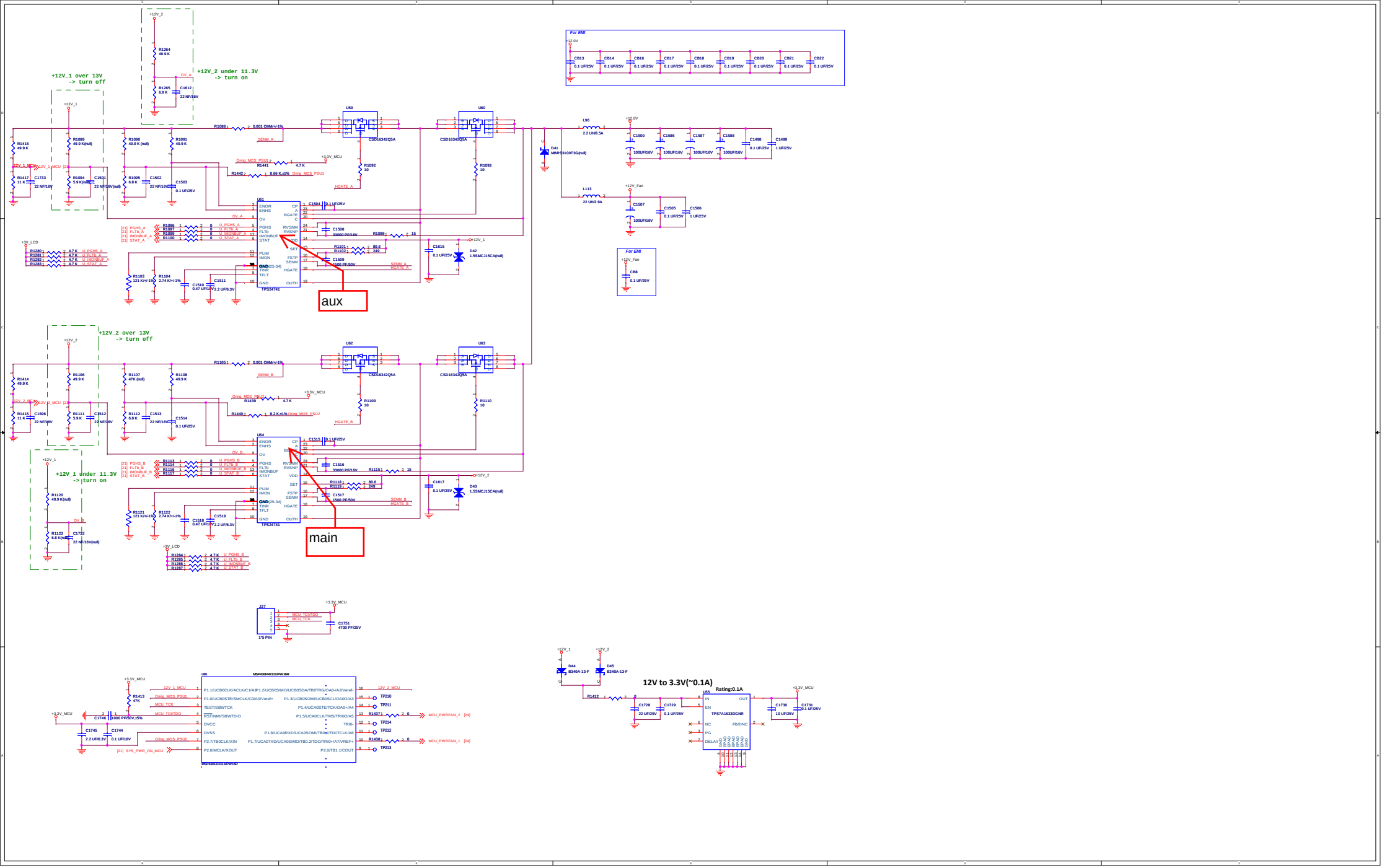
+12V_1 over 13V
-> turn off
+12V_2 under 11.3V
-> turn on
+12V_2 over 13V
-> turn off
+12V_1 under 11.3V
-> turn on
aux
main
For EMI
12V to 3.3V(~0.1A)
Rating:0.1A
TPS24741
MSP430FR2311PW16R
TPS7A1633DGNR
CSD16342Q5A
1*5 PIN