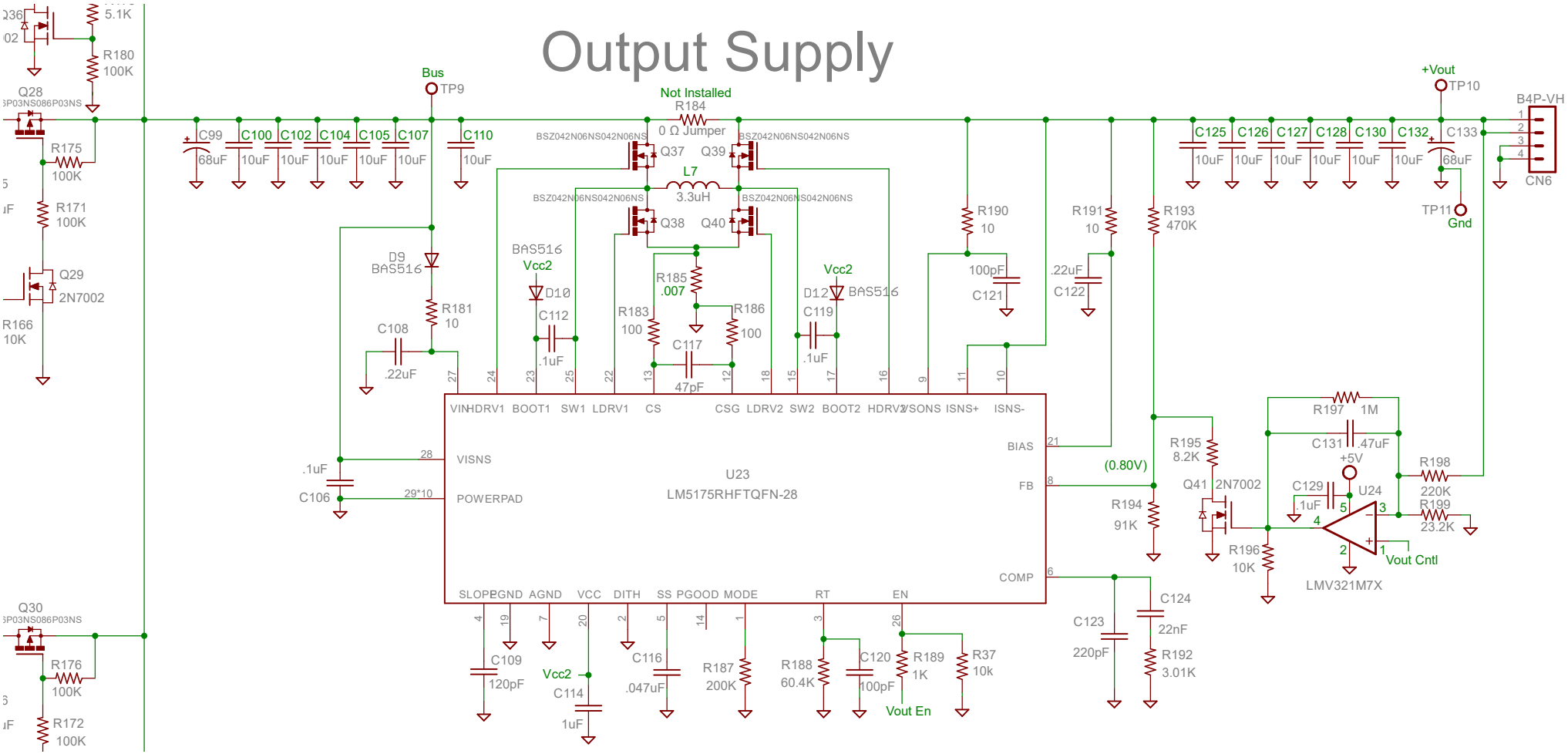Output Supply