Battery Charger and Power Transfer Switch

Grounds Connected with Copper per the layout notes for the BQ24630.

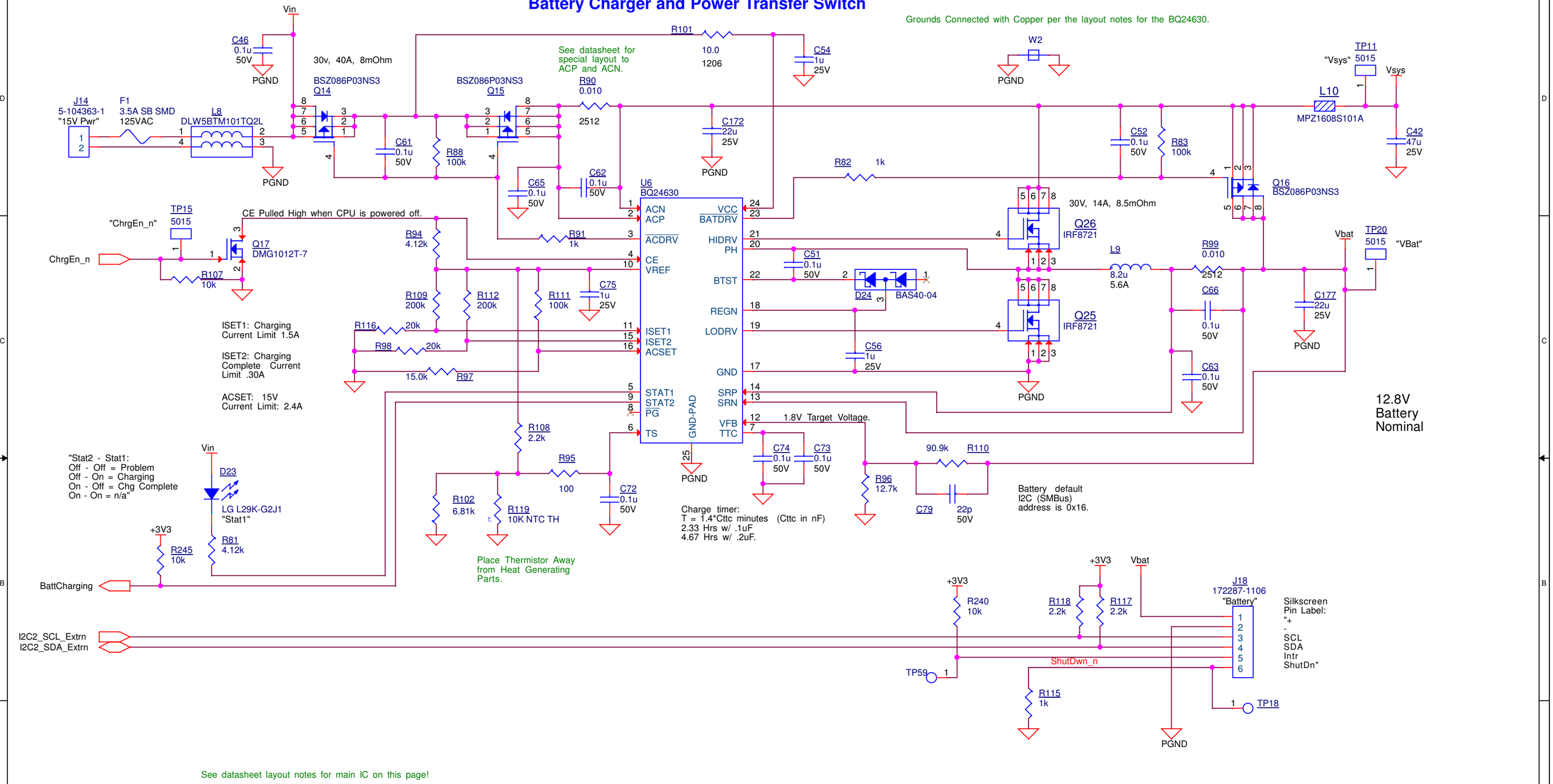

See datasheet layout notes for main IC on this page!

IRRAS			Rev
Design Name	IRRAflow	Doc Num IRA-2CNTR2	A
Page Name	Battery Management		
Size B	Drawn By: S. Patterson	G8 PN:P08: Battery Management	
	Date: Thursday, January 05, 2017	Sheet 8 of 12	