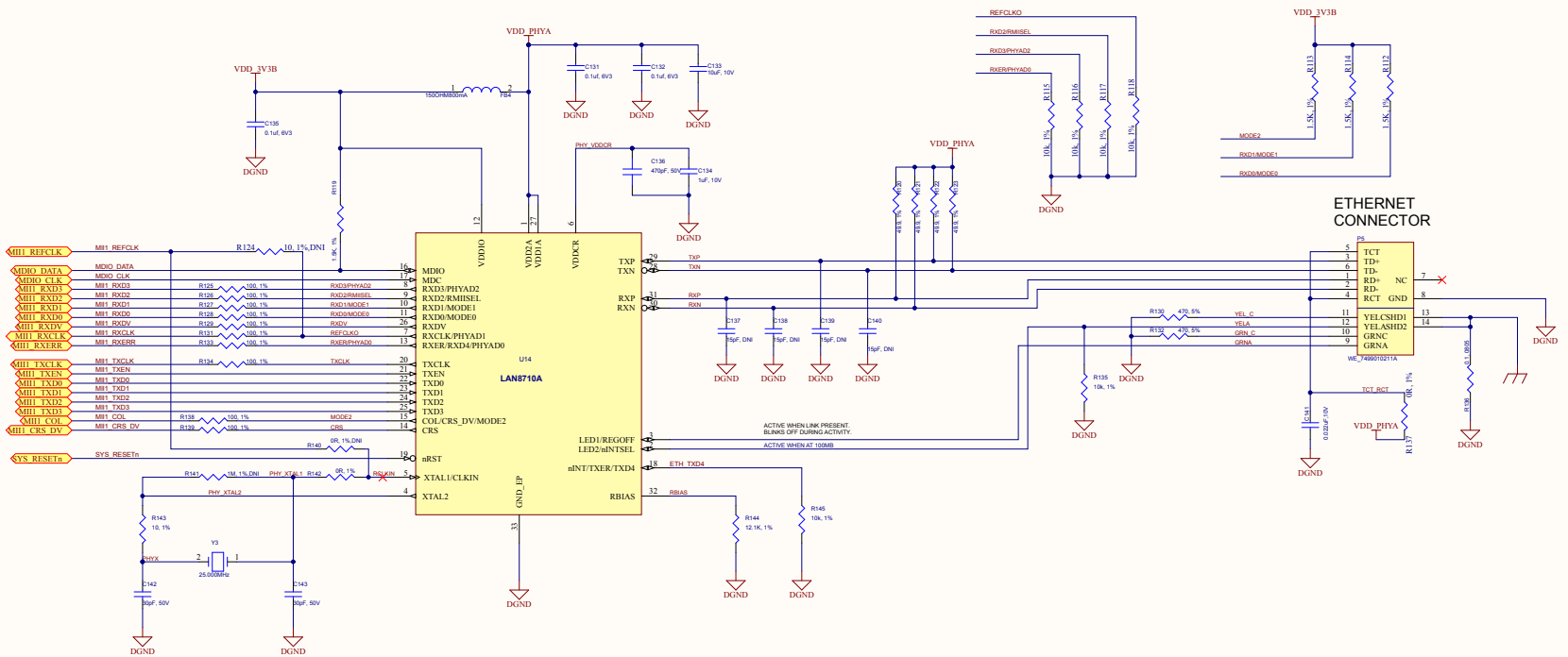

beagleboard.org
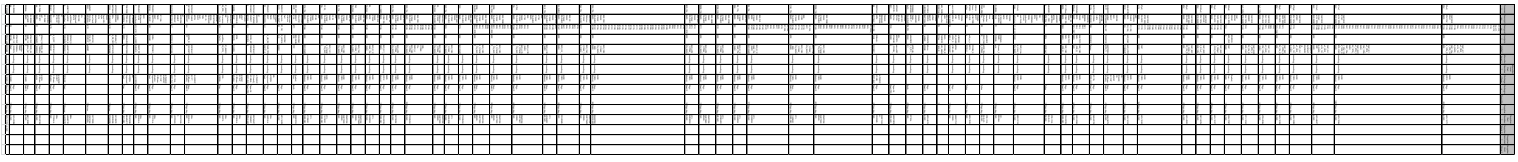
Title	BeagleBoneBlack Ethernet		
Size A	Document Number 450-5500-001		Rev A5B
Date: Monday, April 01, 2013		Sheet 9 of 11