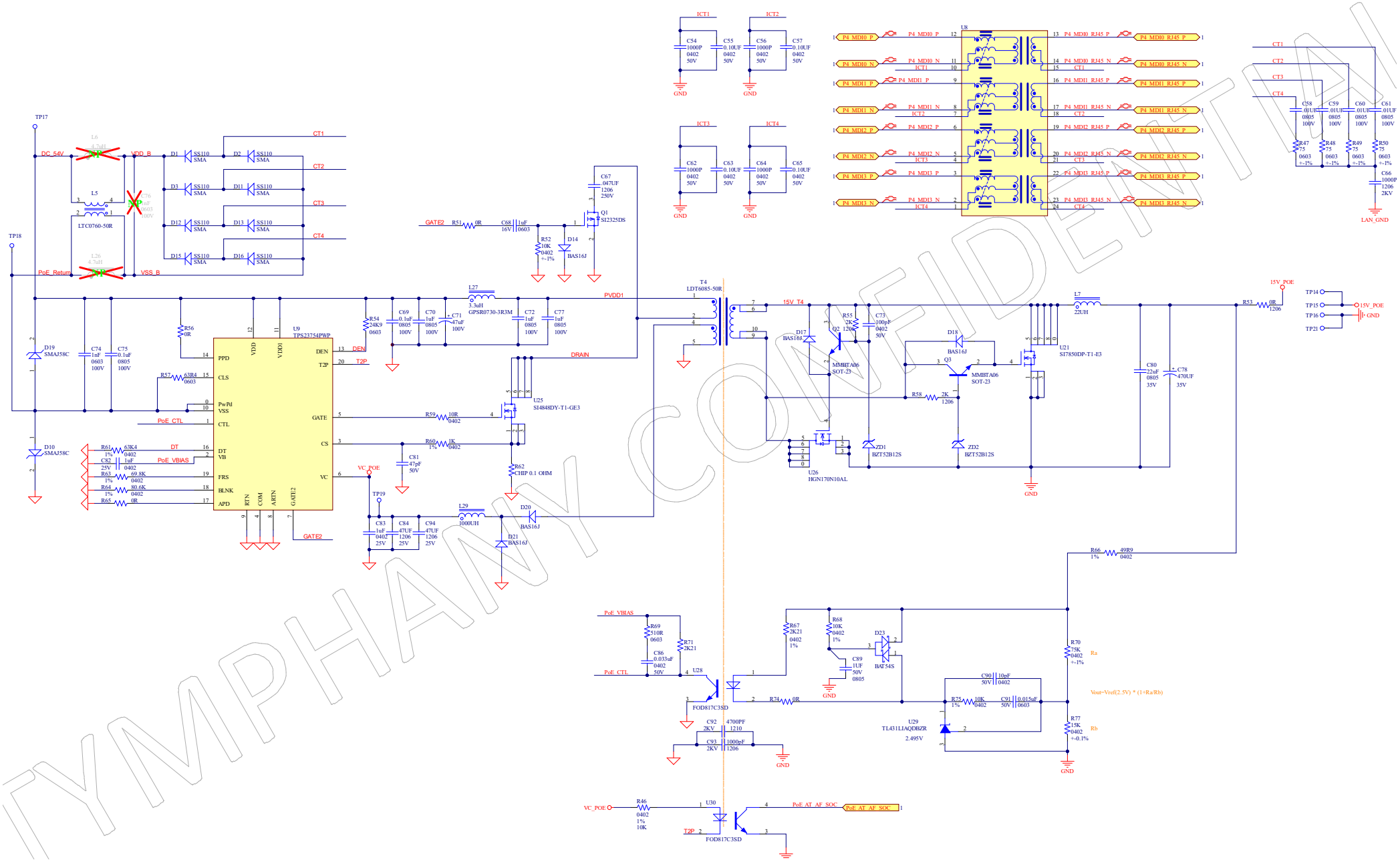


TYMPHANY CONFIDENTIAL