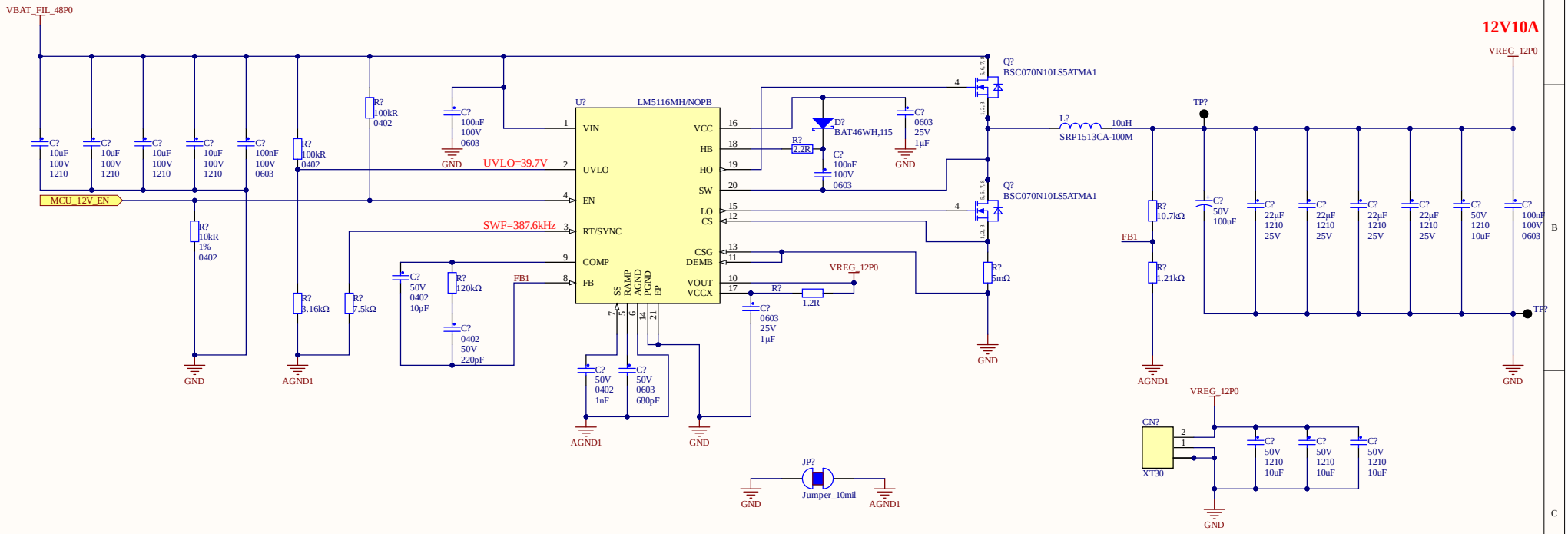

Title		
Size A3	Number	Revision
Date: 11/24/2025		Sheet of
File: Sheet1.SchDoc		Drawn By: