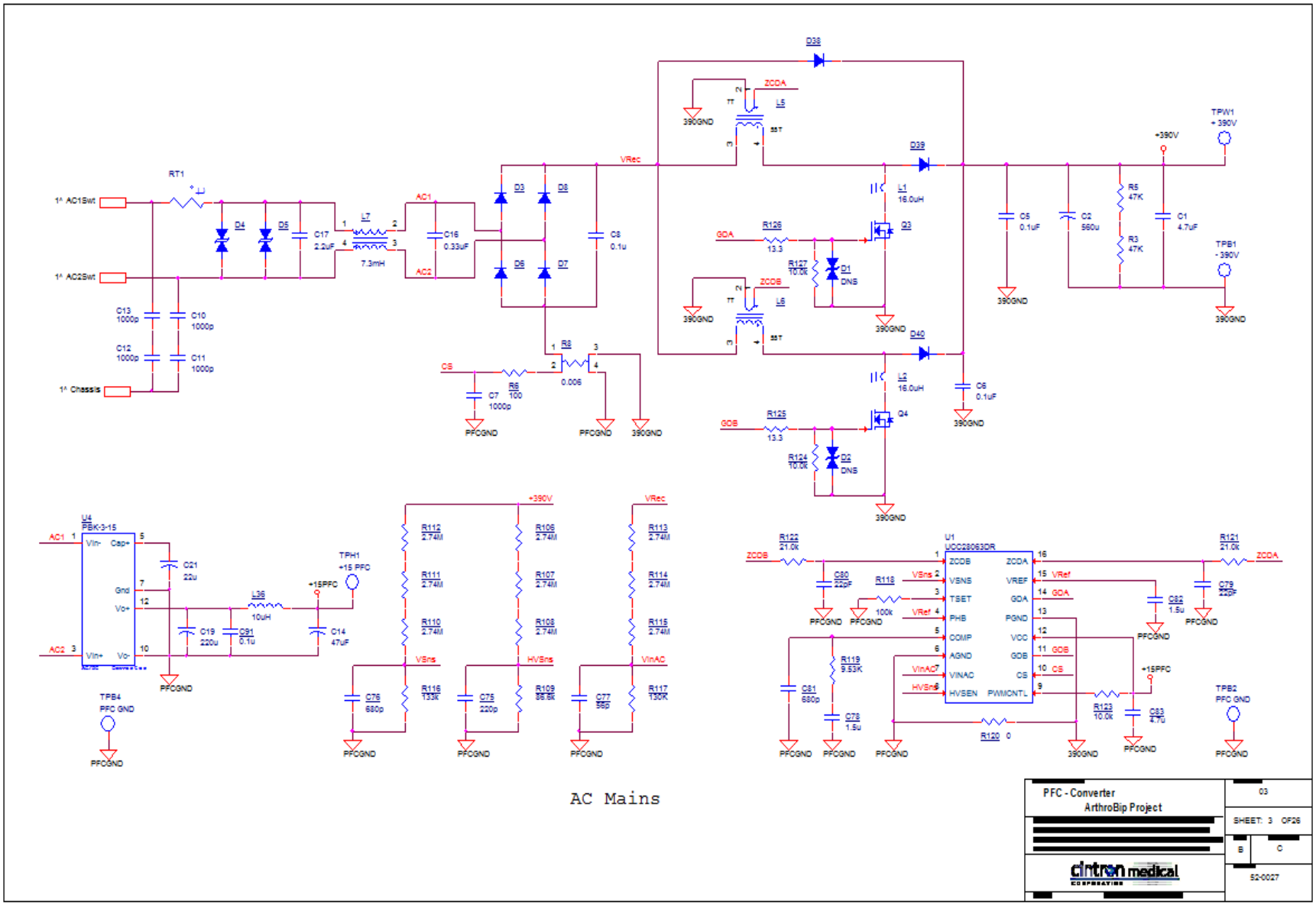
AC Mains
PFC - Converter
ArthroBip Project
03
SHEET: 3 OF26
B
C
cintron medical
52-0027
RT1
AC1Swt
AC2Swt
Chassis
D4
D5
C17 2.2uF
L7 7.3mH
C16 0.33uF
C13 1000p
C10 1000p
C12 1000p
C11 1000p
D3
D8
D6
D7
C8 0.1u
VRec
R8 0.006
R6 100
C7 1000p
CS
PFCGND
390GND
D38
D39
D40
L5
L6
ZCDA
ZCDB
55T
L1 16.0uH
L2 16.0uH
Q3
Q4
GDA
GDB
R126 13.3
R125 13.3
R127 10.0k
R124 10.0k
D1 DNS
D2 DNS
C5 0.1uF
C6 0.1uF
C2 560u
R5 47K
R3 47K
C1 4.7uF
+390V
TPW1 + 390V
TPB1 - 390V
U4 PBK-3-15
Vin- Cap+ Gnd Vo+ Vin+ Vo-
C21 22u
C19 220u
C91 0.1u
L36 10uH
C14 47uF
+15PFC
TPH1 +15 PFC
TPB4 PFC GND
R112 2.74M
R111 2.74M
R110 2.74M
R116 133K
C76 680p
VSns
R106 2.74M
R107 2.74M
R108 2.74M
R109 98.8K
C75 220p
HVSns
R113 2.74M
R114 2.74M
R115 2.74M
R117 130K
C77 560
VInAC
U1 UCC28063DR
ZCDB VSNS TSET PHB COMP AGND VINAC HVSEN
ZCDA VREF GDA PGND VCC GDB CS PWMCNTL
R122 21.0k
R121 21.0k
C80 22pF
C79 22pF
R118 100k
VRef
C82 1.5u
R119 9.53K
C81 680p
C78 1.5u
R120 0
R123 10.0k
C83 4.7u
TPB2 PFC GND