Gate Driver Power Supply High Side Leg 1 (HS1) - S1

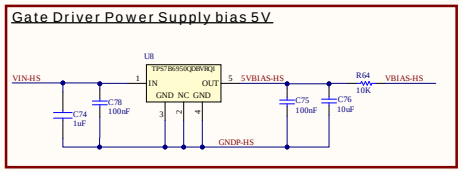

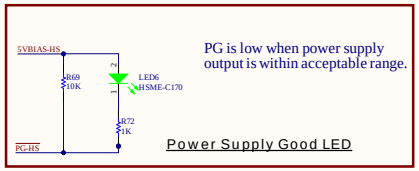

PG is low when power supply output is within acceptable range.

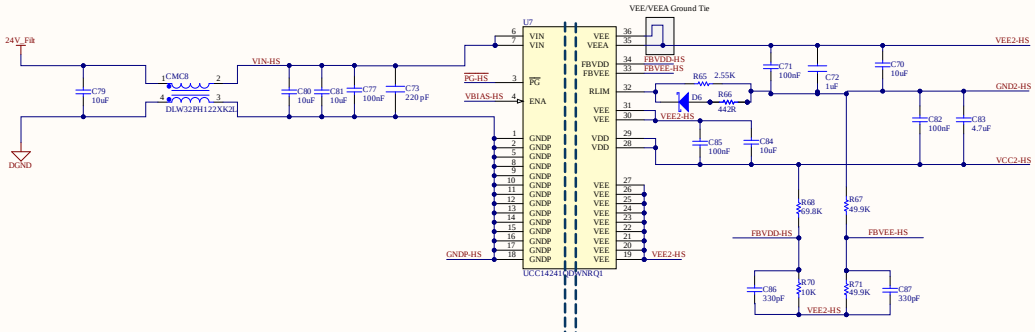

Gate Driver High Side Leg 1 (HS1) - S1

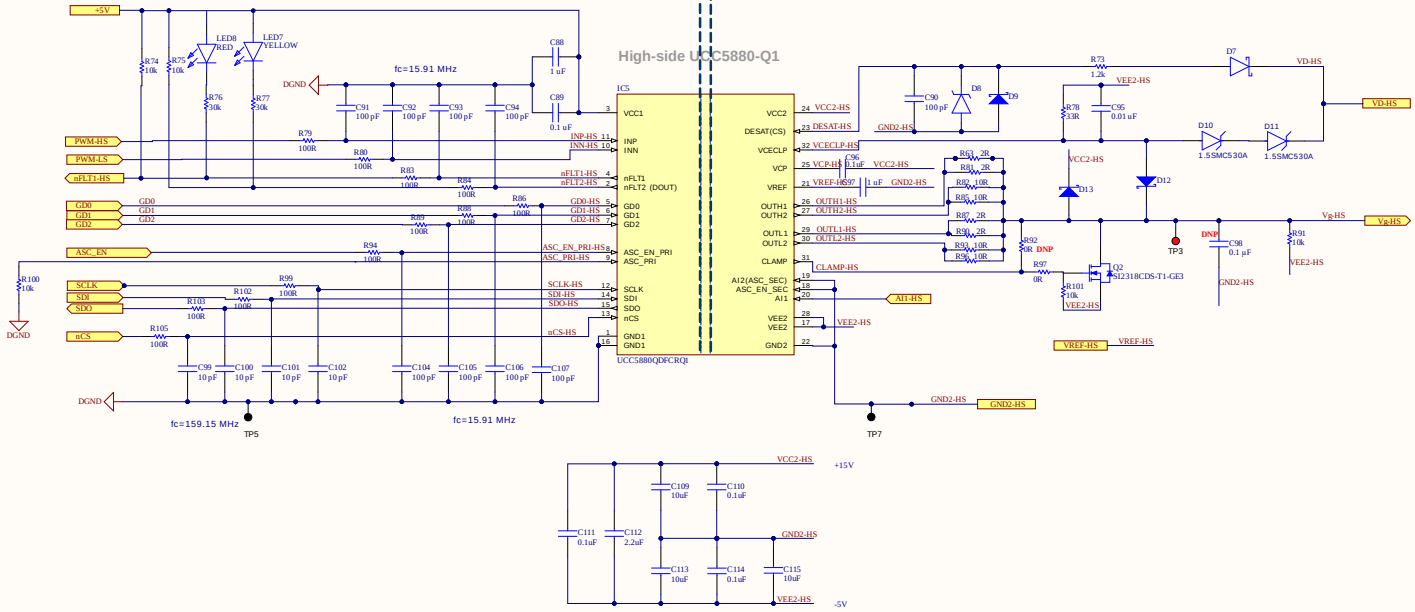

Title		
Size A2	Number	Revision
Date:		Sheet of
File:		Drawn By: