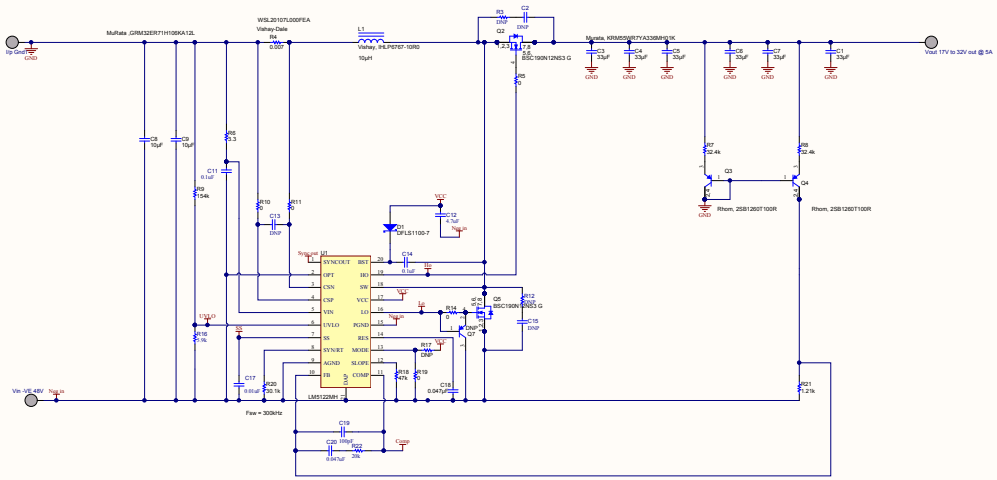

Title			
Size: D	Number		Revision
Date: 1/14/2014		Sheet of	
File: C:\Users\PMP10742\Schematic Rev 1.SchDoc		Drawn By:	