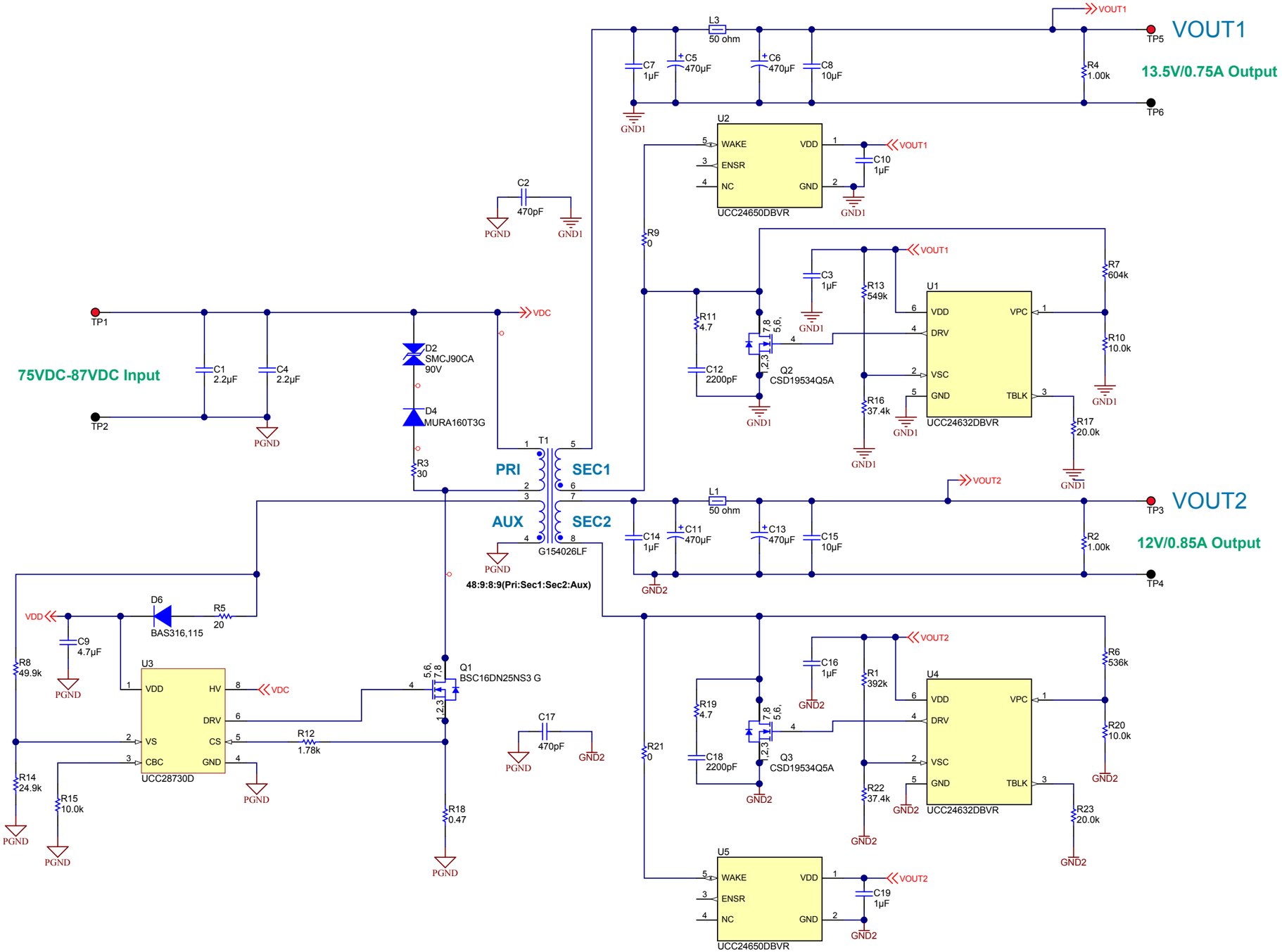

PRELIMINARY

PCB Number: PMP11179
PCB Rev: A

Texas Instruments and/or its licensors do not warrant the accuracy or completeness of this specification or any information contained therein. Texas Instruments and/or its licensors do not warrant that this design will meet the specifications, will be suitable for your application or fit for any particular purpose, or will operate in an implementation. Texas Instruments and/or its licensors do not warrant that the design is production worthy. You should completely validate and test your design implementation to confirm the system functionality for your application.

Orderable: N/A	Designed for:	Mod. Date: 7/15/2015
TID #:	Project Title: 80VDCin; 12V/13.5V 20W PSR Flyback	
Number: PMP11179 Rev: A	Sheet Title:	
SVN Rev: Version control disabled	Assembly Variant: 001	Sheet: 1 of 1
Drawn By:	File: PMP11179_REVA.SchDoc	Size: B
Engineer: B King	Contact: http://www.ti.com/support	

Texas Instruments
http://www.ti.com

© Texas Instruments 2015