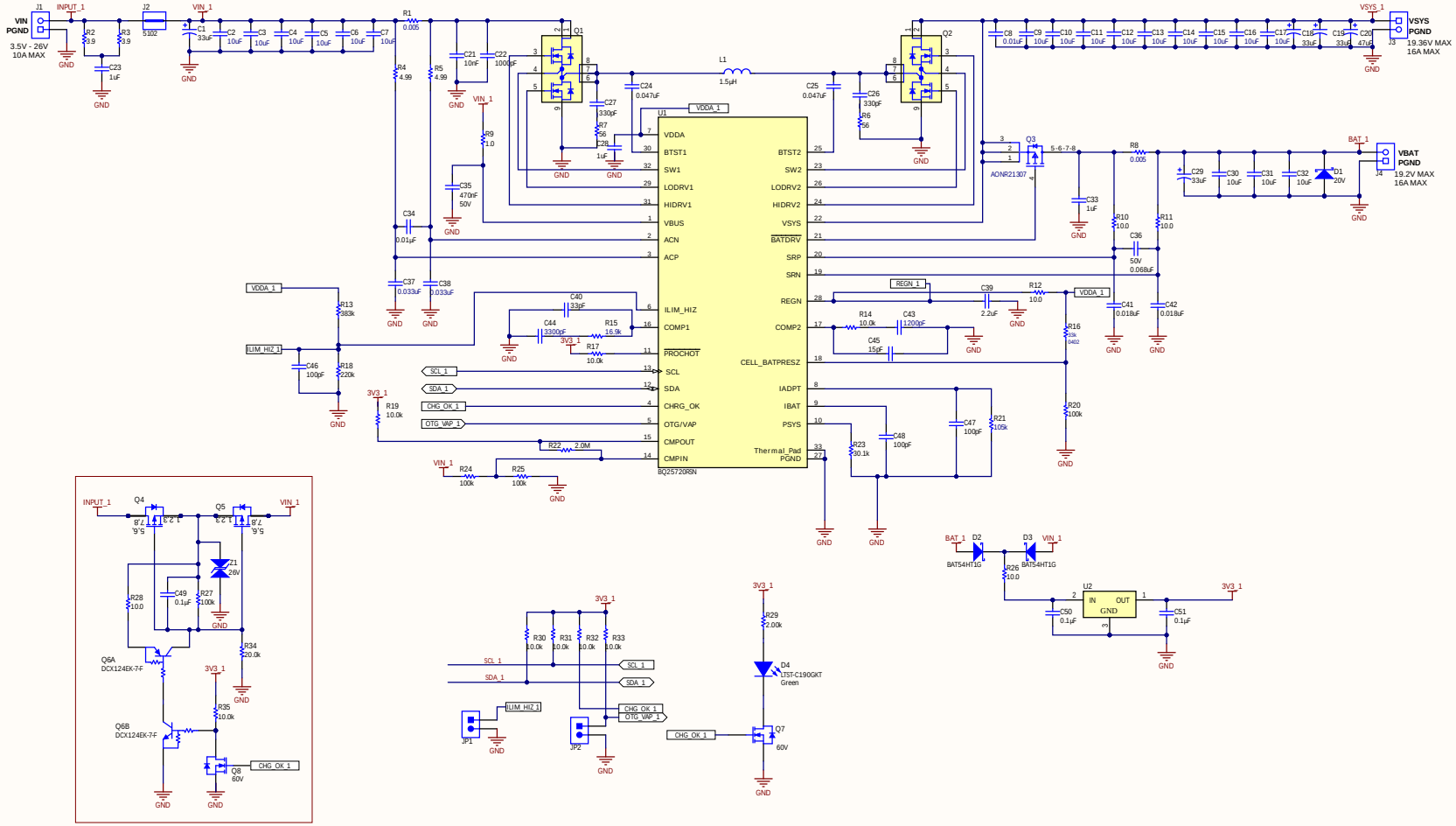
VIN
PGND
3.5V - 26V
10A MAX
J1
INPUT_1
J2
5102
VIN_1
C1 33uF
C2 10uF
C3 10uF
C4 10uF
C5 10uF
C6 10uF
C7 10uF
R1 0.005
R2 3.9
R3 3.9
C23 1uF
R4 4.99
R5 4.99
C21 10nF
C22 1000pF
Q1
C24 0.047uF
C27 330pF
R7 56
C26 1uF
L1 1.5µH
C25 0.047uF
C26 330pF
R6 56
Q2
C8 0.01uF
C9 10uF
C10 10uF
C11 10uF
C12 10uF
C13 10uF
C14 10uF
C15 10uF
C16 10uF
C17 10uF
C18 33uF
C19 33uF
C20 47uF
VSYS_1
J3
VSYS
PGND
19.36V MAX
16A MAX
R9 1.0
C35 470nF 50V
C34 0.01µF
C37 0.033uF
C38 0.033uF
U1
VDDA_1
VDDA
BTST1
SW1
LODRV1
HIDRV1
VBUS
ACN
ACP
ILIM_HIZ
COMP1
PROCHOT
SCL
SDA
CHRG_OK
OTG/VAP
CMPOUT
CMPIN
BTST2
SW2
LODRV2
HIDRV2
VSYS
BATDRV
SRP
SRN
REGN
COMP2
CELL_BATPRES2
IADPT
IBAT
PSYS
Thermal_Pad
PGND
BQ25720RSN
Q3
ADNR21307
5-6-7-8
R8 0.005
C29 33uF
C30 10uF
C31 10uF
C32 10uF
D1 20V
BAT_1
J4
VBAT
PGND
19.2V MAX
16A MAX
C33 1uF
R10 10.0
R11 10.0
C36 50V 0.068uF
REGN_1
C39 2.2uF
R12 10.0
C41 0.018uF
C42 0.018uF
R13 383k
ILIM_HIZ_1
C46 100pF
R18 220k
C40 33pF
C44 3300pF
R15 16.9k
3V3_1
R17 10.0k
R14 10.0k
C43 1200pF
C45 15pF
R16 33k 0402
R20 100k
SCL_1
SDA_1
CHG_OK_1
OTG_VAP_1
R19 10.0k
R22 2.0M
R24 100k
R25 100k
R23 30.1k
C48 100pF
C47 100pF
R21 105k
GND
Q4
Q5
5,6,
7,8
1,2,3,4
Z1 26V
R28 10.0
C49 0.1µF
R27 100k
Q6A
DCX124EK-7-F
R34 20.0k
R35 10.0k
Q6B
DCX124EK-7-F
Q8 60V
BAT_1
D2
BAT54HT1G
D3
BAT54HT1G
R26 10.0
U2
IN
OUT
GND
C50 0.1µF
C51 0.1µF
R30 10.0k
R31 10.0k
R32 10.0k
R33 10.0k
JP1
JP2
R29 2.00k
D4
LTST-C190GKT
Green
Q7 60V