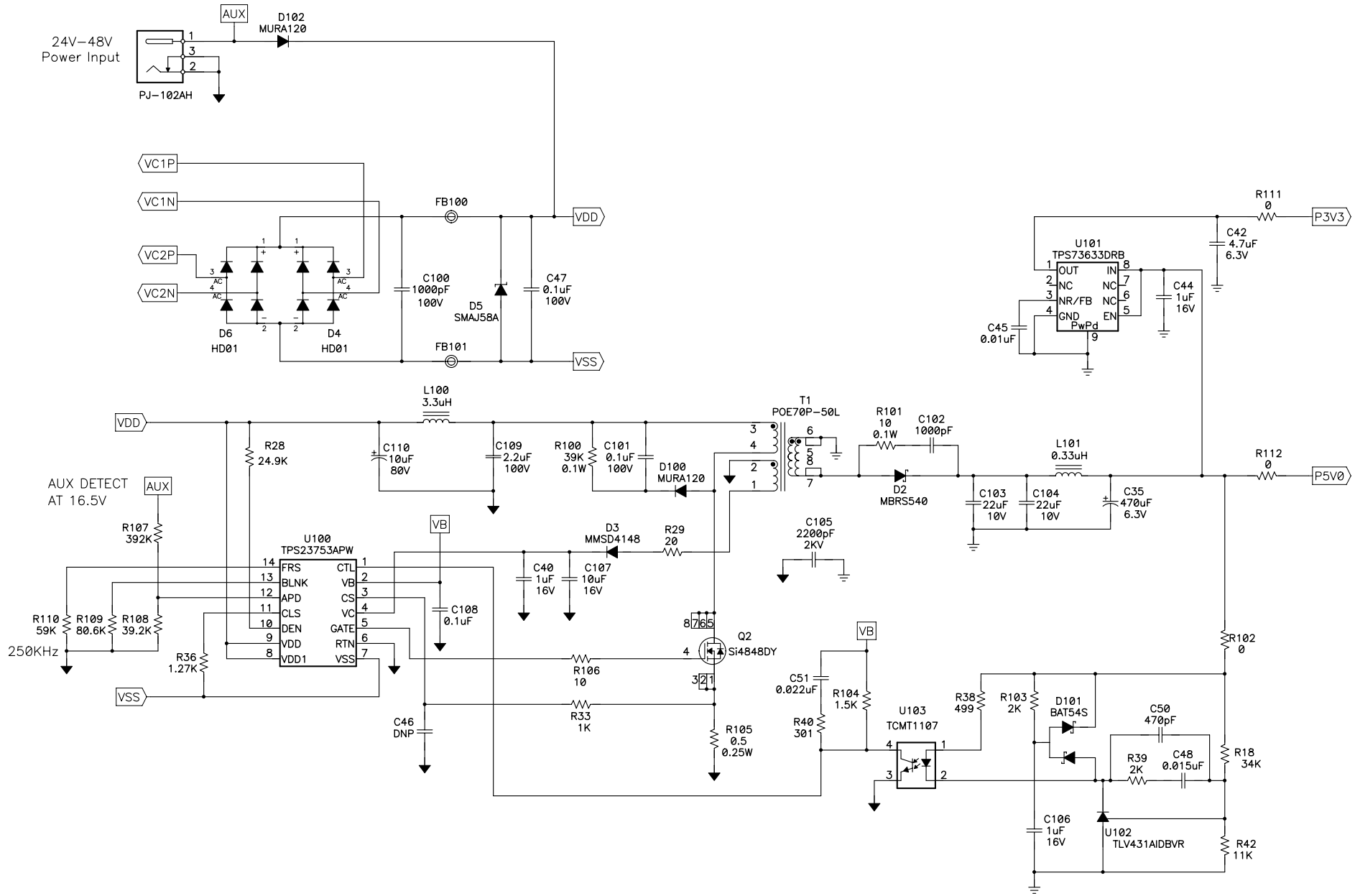

Can be built on HPA304–001 PCB, but
REFDES do not match

Title	Low Power PoE Converter		
Size C	Number PMP5314 TEXAS INSTRUMENTS		Rev B
Date 09–03–10		Drawn by D STRASSER	
Filename PMP5314_RevB.sch		Sheet 1 of 1	