4-Phase Synchronous Buck
Vin = 16V
Vout = 1.65V, Iout = 50A.

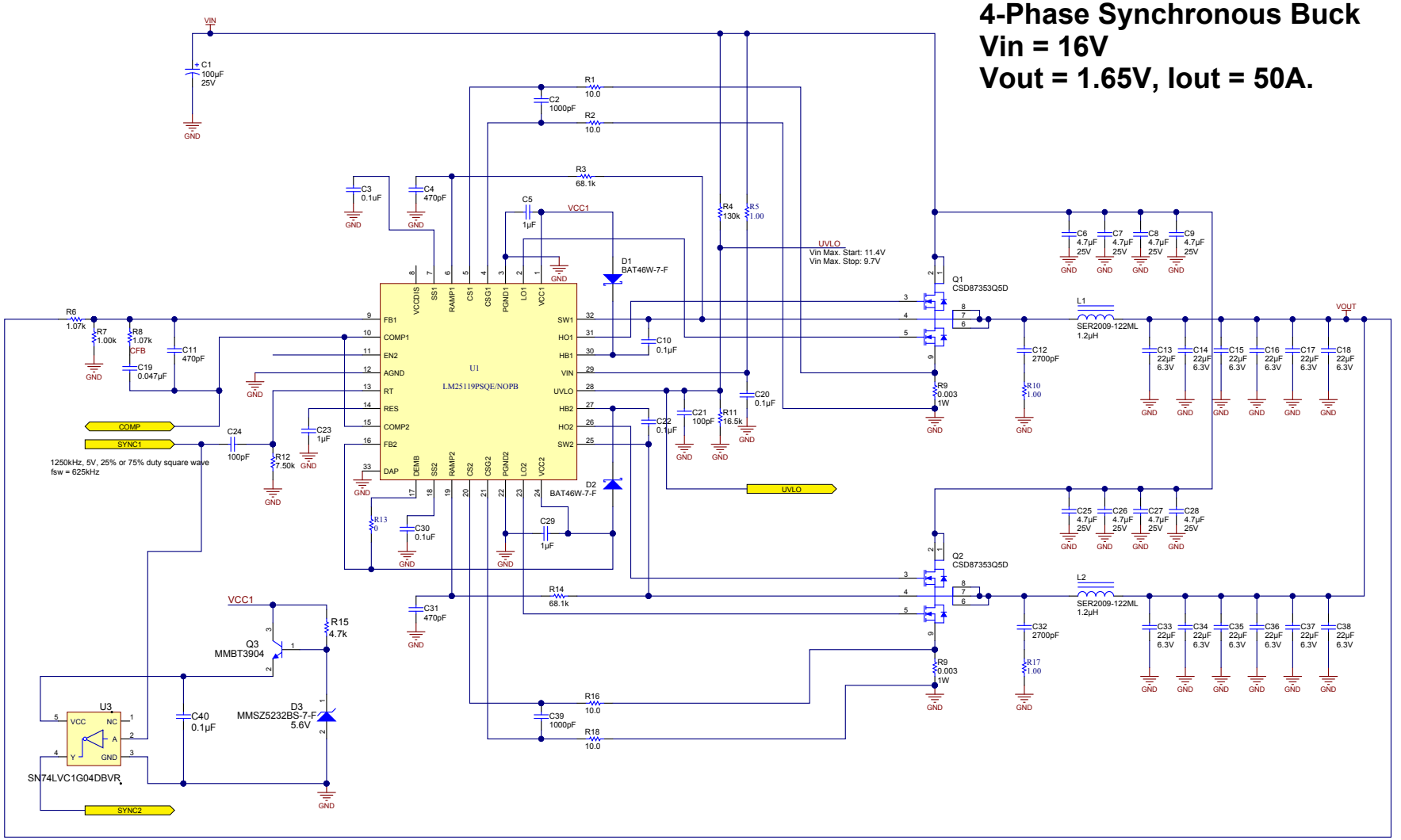

Texas Instruments and/or its licensors do not warrant the accuracy or completeness of this specification or any information contained therein. Texas Instruments and/or its licensors do not warrant that this design will meet the specifications, will be suitable for your application or fit for any particular purpose, or will operate in an implementation. Texas Instruments and/or its licensors do not warrant that the design is production worthy. You should completely validate and test your design implementation to confirm the system functionality for your application.

Number: PMP9323	Rev: A	Designed for:	Mod. Date: 11/27/2013
SVN Rev: Not in version control		Project Title: LM25119 Multi-Phase Buck	
		Sheet Title: Channels 1 & 2	
		Assembly Variant: Variant name not interpreted	Sheet: 1 of 2
Drawn By: D Zhang		File: PMP9323_1_Sh1.SchDoc	Size: B
Engineer: D Zhang		Contact: http://www.ti.com/support	http://www.ti.com

© Texas Instruments 2013

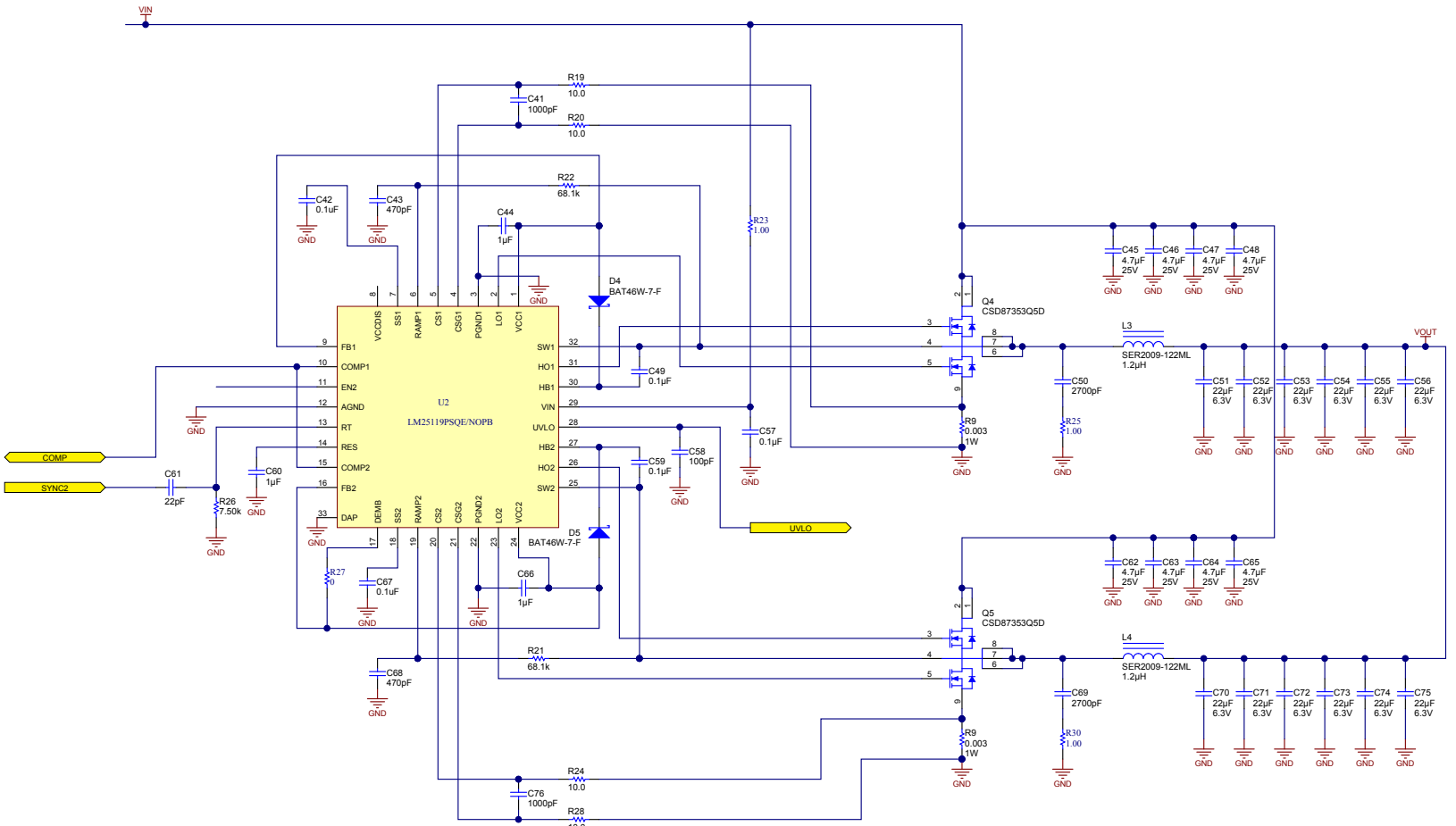

Texas Instruments and/or its licensors do not warrant the accuracy or completeness of this specification or any information contained therein. Texas Instruments and/or its licensors do not warrant that this design will meet the specifications, will be suitable for your application or fit for any particular purpose, or will operate in an implementation. Texas Instruments and/or its licensors do not warrant that the design is production worthy. You should completely validate and test your design implementation to confirm the system functionality for your application.

Number: PMP9323	Rev: A	Designed for:	Mod. Date: 11/27/2013
SVN Rev: Not in version control		Project Title: LM25119 Multi-Phase Buck	
Drawn By: D Zhang		Sheet Title: Channels 3 & 4	
Engineer: D Zhang		Assembly Variant: Variant name not interpreted	Sheet: 2 of 2
		File: PMP9323_1_Sh2.SchDoc	Size: B
		Contact: http://www.ti.com/support	

TEXAS INSTRUMENTS
http://www.ti.com

© Texas Instruments 2013