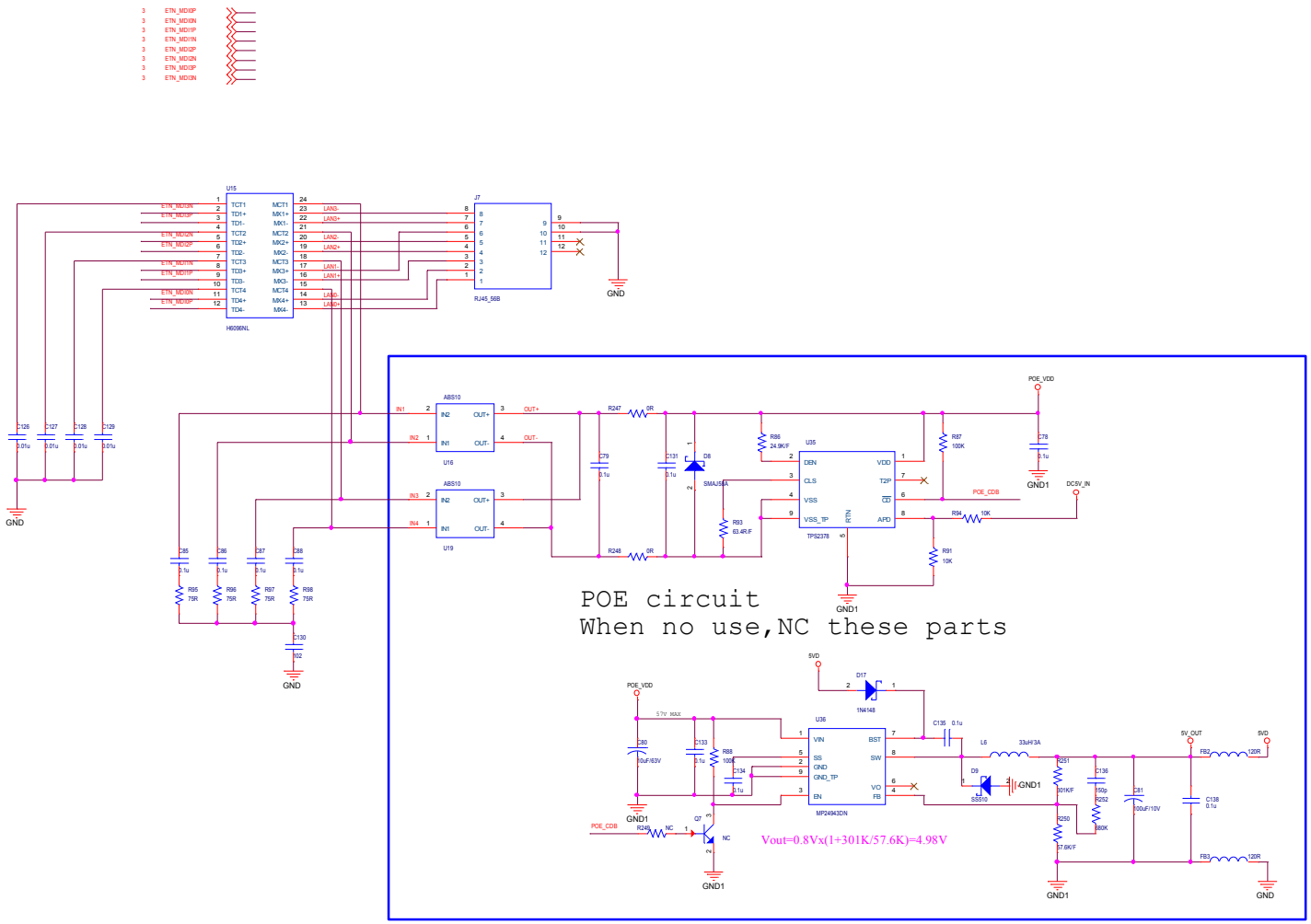

Actions Microelectronics Co.,Ltd.

Title	AM8278_QuattroTX	
Size C	Document Number 06.Ethnet with POE	Rev V3
Date: Thursday, November 30, 2017	Sheet 6 of 7	