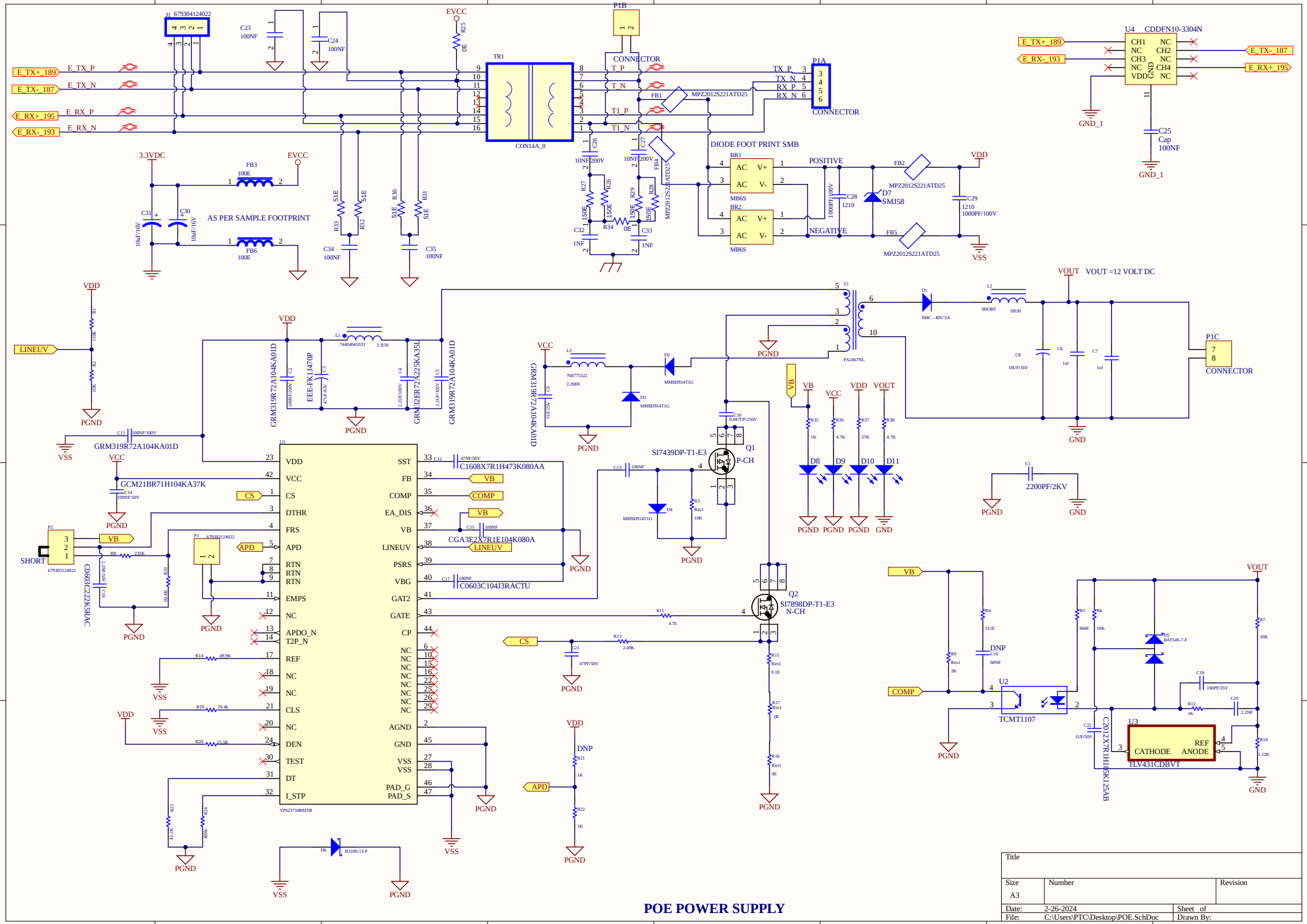
POE POWER SUPPLY
Title
Size
A3
Number
Revision
Date: 2-26-2024
File: C:\Users\PTC\Desktop\POE.SchDoc
Sheet of
Drawn By:
E_TX+_189
E_TX-_187
E_RX+_195
E_RX-_193
E_TX_P
E_TX_N
E_RX_P
E_RX_N
TR1
CON14A_0
CONNECTOR
P1A
P1B
P1C
U4 CDDFN10-3304N
GND_1
C25 Cap 100NF
DIODE FOOT PRINT SMB
BR1
BR2
MB6S
POSITIVE
NEGATIVE
D7 SMJ58
MPZ2012S221ATD25
VDD
VSS
3.3VDC
EVCC
AS PER SAMPLE FOOTPRINT
VOUT =12 VOLT DC
PA2467NL
SMC - 40V/3A
LINEUV
PGND
GND
VCC
VB
COMP
CS
APD
SHORT
GRM319R72A104KA01D
EEE-FK1J470P
GRM32ER72A225KA35L
GCM21BR71H104KA37K
C1608X7R1H473K080AA
CGA3E2X7R1E104K080A
C0603C104J3RACTU
C0603C222K5RAC
TPS23734RMTR
SI7439DP-T1-E3
P-CH
SI7898DP-T1-E3
N-CH
TCMT1107
TL431CDBVT
C2012X7R1H105K125AB
2200PF/2KV
DNP