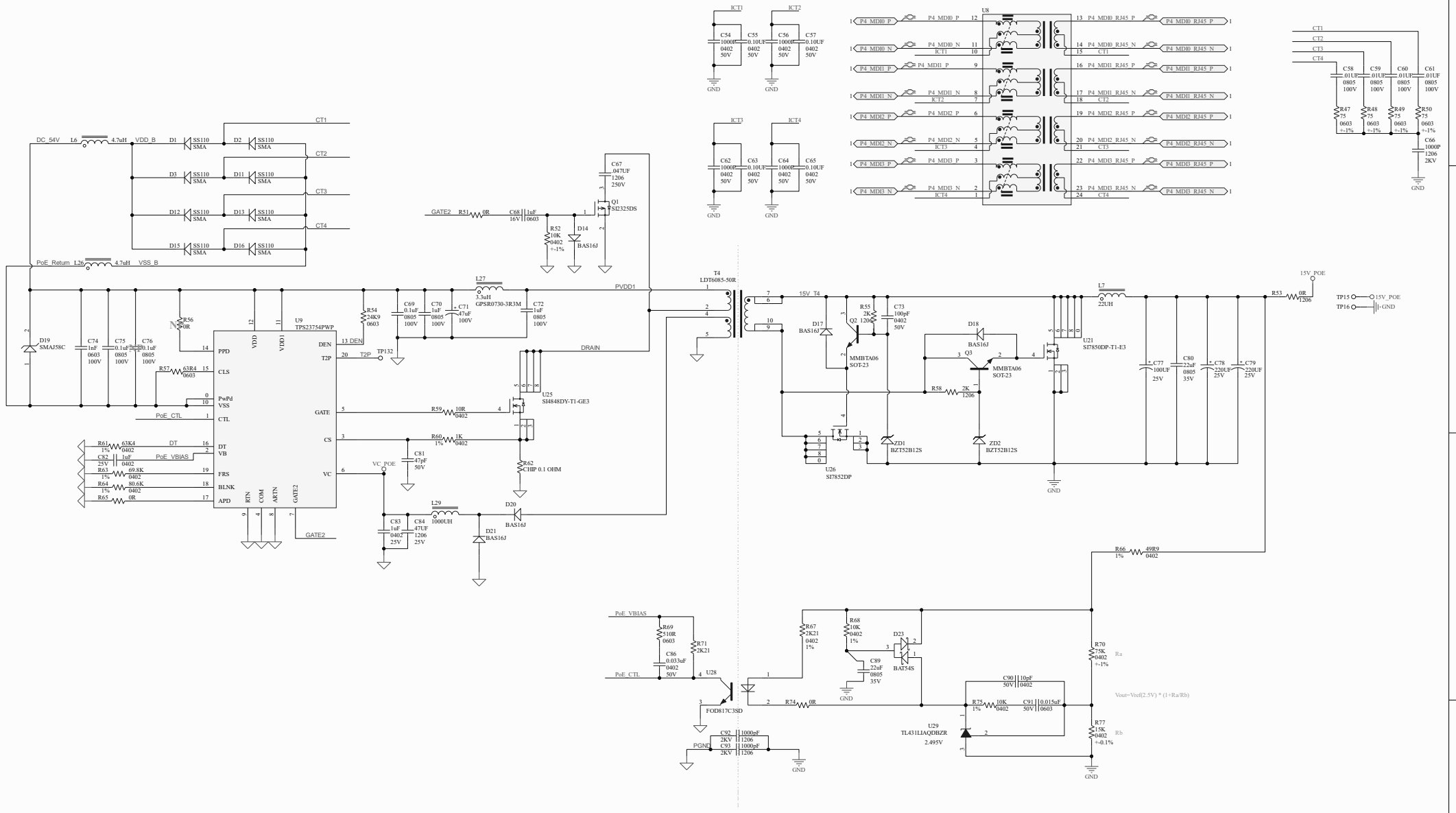

Title *			
Size: A2	Number: 4	Revision: *	
Date: 2021/12/2	Time: 上午 10:50:08	Sheet 5 of 16	
File: D:\POE_15v\SchDoc			

Altium