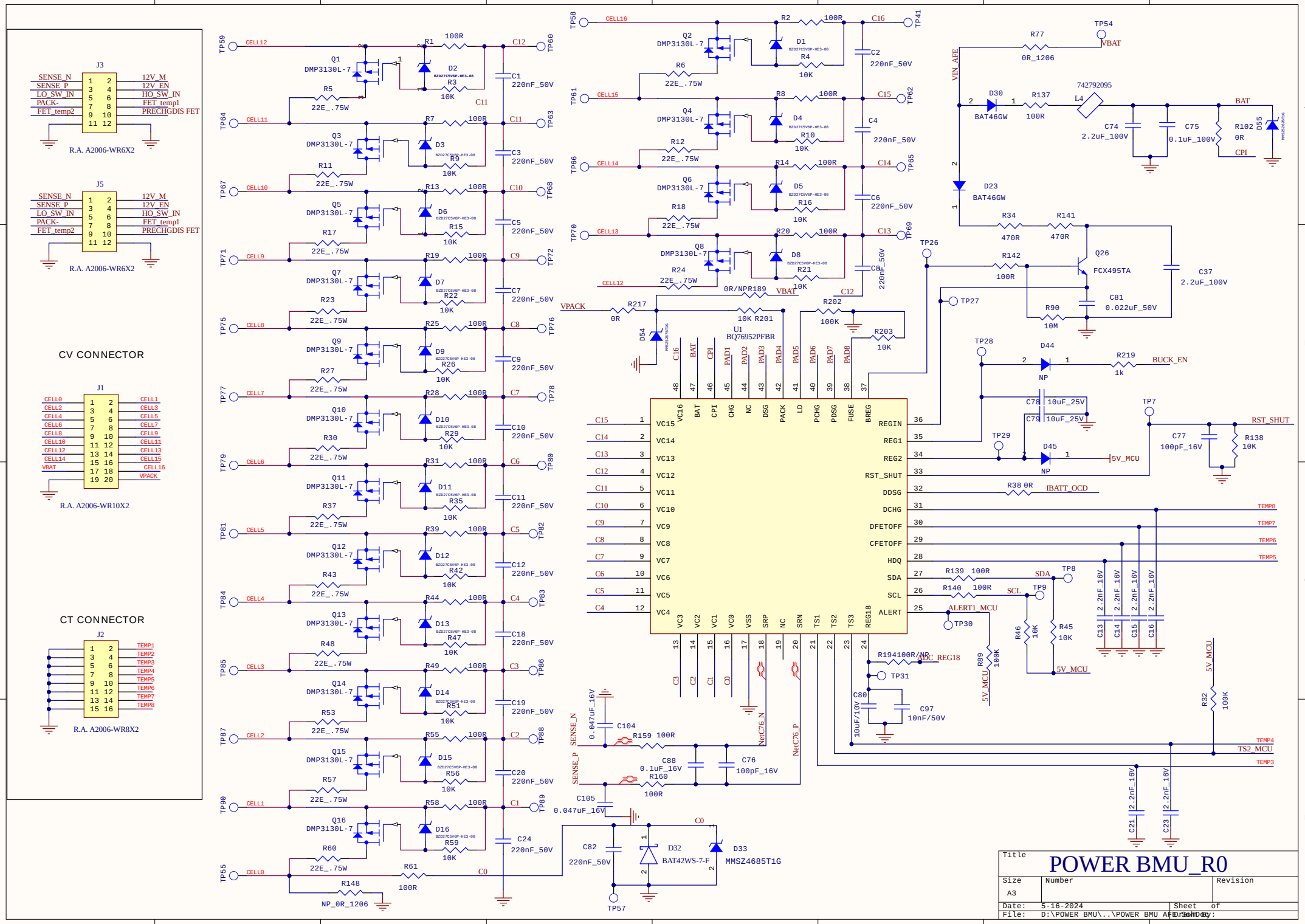
J3
SENSE_N
SENSE_P
LO_SW_IN
PACK-
FET_temp2
12V_M
12V_EN
HO_SW_IN
FET_temp1
PRECHGDIS FET
R.A. A2006-WR6X2
J5
CV CONNECTOR
J1
CELL0
CELL2
CELL4
CELL6
CELL8
CELL10
CELL12
CELL14
VBAT
CELL1
CELL3
CELL5
CELL7
CELL9
CELL11
CELL13
CELL15
CELL16
VPACK
R.A. A2006-WR10X2
CT CONNECTOR
J2
TEMP1
TEMP2
TEMP3
TEMP4
TEMP5
TEMP6
TEMP7
TEMP8
R.A. A2006-WR8X2
U1
BQ76952PFBR
VC16
BAT
CPI
CHG
NC
DSG
PACK
LD
PCHG
PDSG
FUSE
BREG
REGIN
REG1
REG2
RST_SHUT
DDSG
DCHG
DFETOFF
CFETOFF
HDQ
SDA
SCL
ALERT
VC15
VC14
VC13
VC12
VC11
VC10
VC9
VC8
VC7
VC6
VC5
VC4
VC3
VC2
VC1
VC0
VSS
SRP
SRN
TS1
TS2
TS3
REG18
PAD1
PAD2
PAD3
PAD4
PAD5
PAD6
PAD7
PAD8
VIN_AFE
VBAT
BAT
CPI
BUCK_EN
5V_MCU
IBATT_OCD
RST_SHUT
TEMP8
TEMP7
TEMP6
TEMP5
TEMP4
TS2_MCU
TEMP3
SDA
SCL
ALERT1_MCU
SENSE_N
SENSE_P
NetC76_N
NetC76_P
VPACK
C0
Title
POWER BMU_R0
Size
A3
Number
Revision
Date: 5-16-2024
Sheet of
File: D:\POWER BMU\..\POWER BMU_AFE.SchDoc
Drawn By: