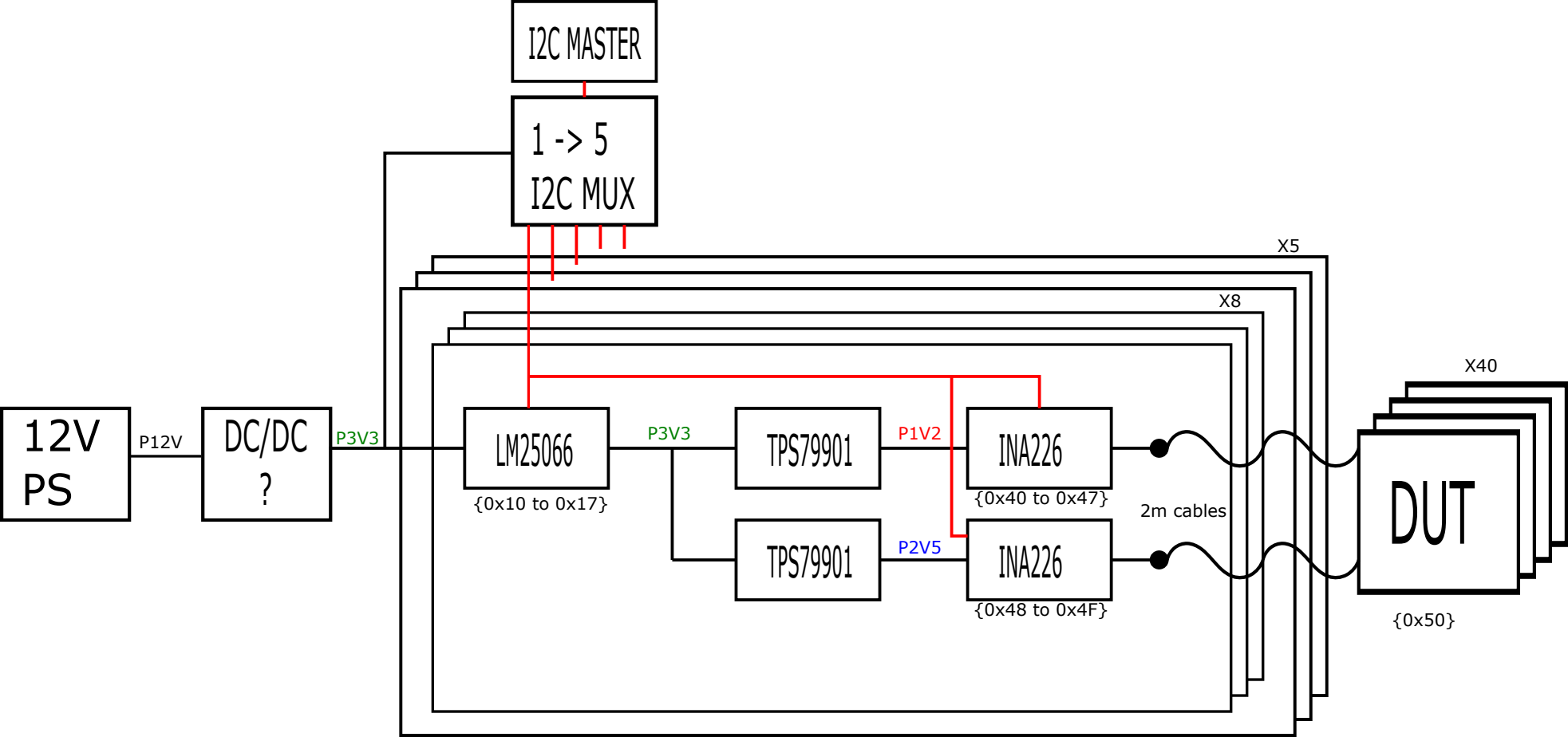
I2C MASTER
1 -> 5
I2C MUX
X5
X8
X40
12V
PS
P12V
DC/DC
?
P3V3
LM25066
{0x10 to 0x17}
P3V3
TPS79901
P1V2
INA226
{0x40 to 0x47}
TPS79901
P2V5
INA226
{0x48 to 0x4F}
2m cables
DUT
{0x50}