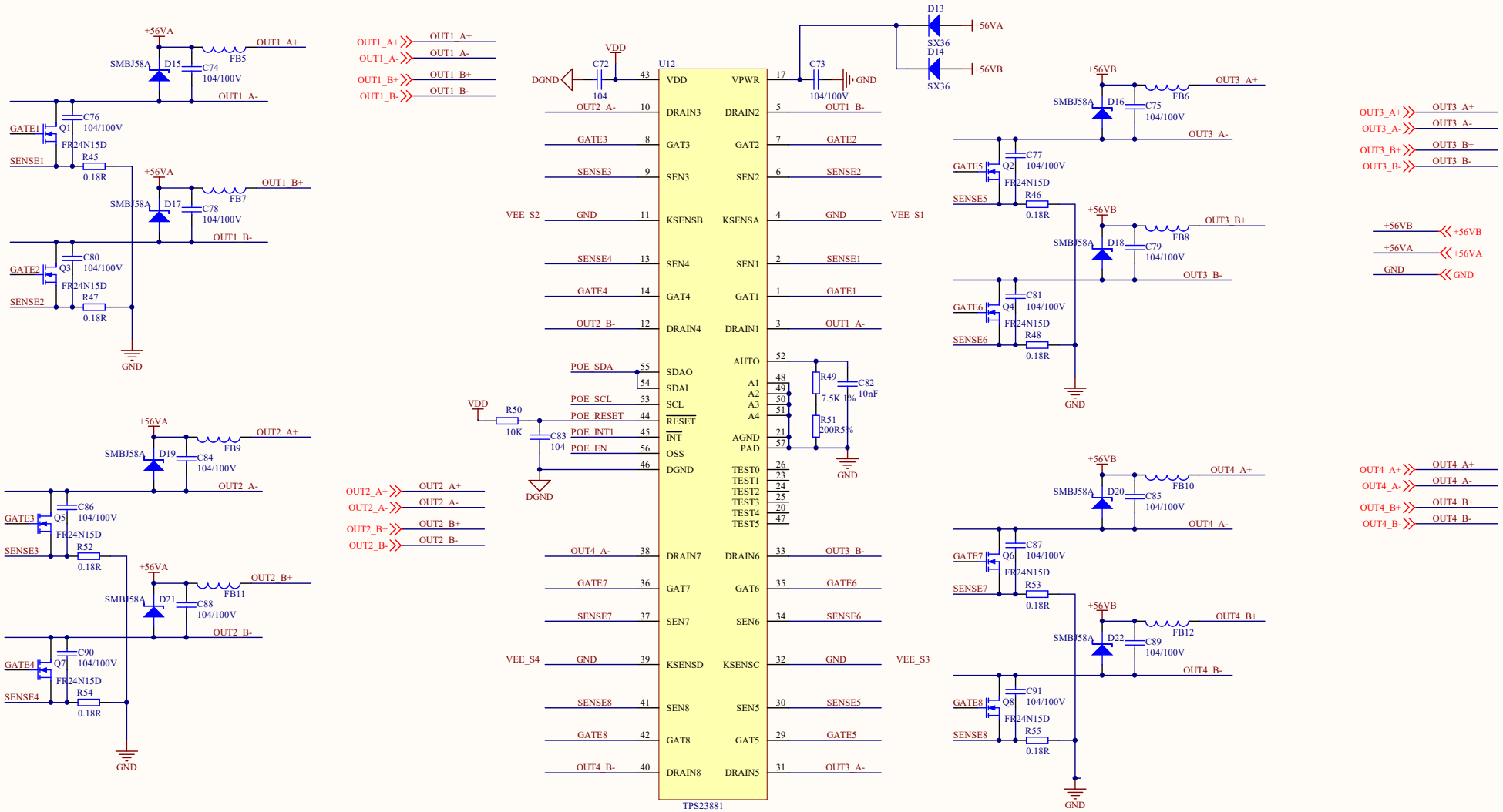

PSE - PSE chip

			C19106V05.Sch
			PSE_4M Part
			SS5057-SS5078
			1.0
/	8/9		2022-3-1

Comment	Description	Designator	Footprint	LibRef	Quantity
104/100V	Capacitor, 贴片电容	C1, C2, C61, C73, C74, C75, C76, C77, C78, C79, C80, C81, C84, C85, C86, C87, C88, C89, C90, C91, C94, C97, C106	1206C	0.1uF/100V 1206, CAP	23
105	Capacitor, 贴片电容	C3, C6, C21, C99, C101	0603C	0.1uF/50V 0805, CAP	5
104	Capacitor, Chip Capacitor, 100nF, +/-20%, 10V, 0402, 1Thickness 0.6 mm, 容 0.1UF /100V 0805叫作, 容 50V/100nF , 0603 封装 +/-10%,电容电容	C4, C11, C12, C18, C19, C22, C23, C24, C25, C26, C27, C28, C29, C30, C31, C32, C33, C34, C35, C36, C37, C63, C64, C65, C67, C71, C72, C83, C100, C102, C103, C107, C108, C109, C110, C111, C112, C113, C114, C115, C116, C119, C120, C121, C122, C123, C124, C125, C126, C127, C128, C129, C130, C131, C132, C133, C134, C135, C136, C137, C138	0603C	0.1uF/50V 0805, 100nF/50V 0603, 0603C, 0.1uf, 0805C, 0.1uF/100V , CAP, CAP NP, CMP-001-00651-3	61
10uF/16V	Capacitor	C5	0603C	CAP	1
102	Capacitor, 容 4.7nF/50V , 0603,	C7, R5	1206C	0603C_4.7nf, CAP	2
104	Capacitor, 容 4.7nF/50V , 0603, 隔离电容	C8, C14, R6	1206C	0.1uF/100V 1206, 0603C_4.7nf, CAP	3
470uF/16V	Bi-Polar Capacitor,	C9	100U/16V-SMD	MYELECTRO1	1
102	Capacitor	C10	0805C	CAP	1
470uF/16V	容220UF/63V, 外 6.3*7.5	C13	100U/50V-SMD	C_22UF/63V	1
NC	容50V 100pF 0603封装, +/-5%	C15	0603C	0603C_100pf	1
4.7nF	容4.7nF/50V , 0603	C16	0603C	0603C_4.7nf	1
47uF/10V	钽电容	C17	3C6228	47uF/10V 钽电容	1
100uF/16V	Electrolytic Capacitor	C20	100U/16V-SMD	ELECTRO1	1
10nF/50V	贴片电容	C38, C39, C40, C41, C42, C44, C46, C48, C50, C51, C52, C53, C54, C55, C56, C57	0805C	100nF/50V 0603	16
1000P/2KV	Capacitor	C43, C45, C47, C49	1206C	CAP	4
47uF/16V	贴片电容	C58	1206C	0.1uF/100V 1206	1
10uF/16V	贴片电容	C59, C60	1206C	10uF/16V 1206	2
47uF/50V	贴片电容	C62, C66, C68	0603C	47uF/50V 0805	3
NC	Capacitor	C69	1206C	CAP	1
10uF	Capacitor, Chip Capacitor, 10ug +/-20%, 10V, 0603, 1Thickness 1 mm	C70, C98, C117	0603C	CAP, CAP NP, CMP-001-00675-4	3
10uF	Capacitor	C82	0603C	CAP	1
100uF/63V		C92, C93, C95, C96	100U/63V-SMD	MYELECTRO1	4
1000PF/2KV	高压贴片电容	C104, C105	1206C	1000PF/2000V 1206	2
1uF		C118	0603C	CAP NP	1
5X36	1 Amp General Purpose Rectifier	D1, D2, D13, D14	SMA	Diode 1N4007	4
SS310	Schottky Diode	D3	SMA	MYSCHOTTKY	1
BX310	二极 BX310 Vdc=100V , IF=3A, VF=0.8V , SMA封装	D4, D5	SMA	BX310	2
SMAJ7.5CA	1 Amp General Purpose Rectifier	D6, D10	SMA	Diode 1N4007	2
NC	1 Amp General Purpose Rectifier	D7, D8, D9	SMA	Diode 1N4007, SMAJ5CA	3
BR/2512	1 Amp General Purpose Rectifier	D11, D12	SMA	Diode 1N4007	2
SMB/SBA	肖特基二极管	D15, D16, D17, D18, D19, D20, D21, D22	SMB	SS26	8
4148	Diode	D23, D24, D25, D26	1206D	MYDIODE	4
4148	Diode	D27, D28, D29, D30	1206Z	DIODE	4
EARTH	地接大地	EARTH1, EARTH2, EARTH3, EARTH4	J1	EARTH	4
2A	Fuse	F1	1206R	FUSE1	1
SMD016	自动恢复保险丝	F2, F3	1206R	SMD016	2
		FB1, FB3, FB4, FB5, FB6, FB7, FB8, FB9, FB10, FB11, FB12	1206R	INDUCTOR	11
0	贴片电阻	FB2	1206R	0±5%,1206	1
CON8	Connector	J1, J2, J3, J4, J16, J11	CON8-2.0	CON8	6
CON3	PH排针	J5, J12, J13, J14, J15, J16, J17	CON3-2.0-二排	CON3-2.0-二排	7
CON2	Connector	J6, J18, J19	CON2-2.0-二排	CON2	3
CON2	Connector	J7, J8	CON2-3.96-二排	CON2	2
RGBLCD		J9	FPC-40-0.5	RGBLCD	1
150uH		L1	L6B3UH	INDUCTOR	1
47uH		L2	L47UH-01	L_10u_7*7.5*2.5	1
RED	SML-P11UTT86	LED1	SMDLED-0603	CMP-1230018-SML-P11UTT86-A,01 ,	1
HCPL0601	逻辑门光电耦合器	OP1, OP2, OP3	SO-8	HCPL0601	3
CMP-022-000002-1		P1	M.2_75PIN_0.5MM_KCB_KEY_A	CMP-022-000002-1	1
STM32H743-80*2		P2	BTB连接器安装孔80P - 排插	STM32H743-80*2	1
FR24N/15D	N-Channel MOSFET	Q1, Q2, Q3, Q4, Q5, Q6, Q7, Q8	TO-252	MOSFET-N	8
8050	NPN Transistor, 三极管	Q9, Q10, Q11, Q12, Q13, Q14, Q15	SOT-23	8050, NPN	7
10R	resistance	R1, R2	1206R	RES	2
6.2K	resistance	R3	0603R	RES	1
2K	resistance	R4	0603R	RES	1
4.7R	◎ 820K, ±5% 0603	R7, R8	1206R	0603R_820K	2
31.6K	◎ 620K, ±1% 0603	R9	0603R	0603R_620K	1
300K	◎ 300K 1/10W ± 5% 0603 封装, 贴封装电阻	R10, R123, R124, R125, R126, R128, R129, R130, R131	0603R	1K±5%,0805, 0603R_300K	9
20K1%	◎ 20K, 1/10W , 1%, 0603封装	R11	0603R	0603R_20K	1
10K	贴片电阻	R12	1206R	10K±5%,1206	1
470K	◎ 470K 1/10W ± 5% 0603 封装, 贴封装电阻	R13, R34, R38, R64	0603R	100K±5%,0805, 0603R_470K, R_1	4
10.2K	◎ 12K 1/10W ± 5% 0603	R14	0603R	0603R_12K	1
68K	◎ 68K 1/10W ±5% 0603 封装	R15	0603R	0603R_68K	1
75R	贴片电阻	R16, R17, R18, R19, R20, R21, R22, R23, R24, R25, R26, R27, R28, R29, R30, R31	0603R	0±5%,0805	16
1K	ERJ-2RKF1001X, Resistor, 贴片电阻	R32, R110, R111, R112, R113, R114, R115, R117, R120, R127, R132, R133, R136	0603R	1K±5%,0805, 470R ±5%,0805, CMP-1030148-ERJ-2RKF1001X-A,01, R_1, Res2	13
4.7K	贴片电阻	R33, R35, R39, R56, R57, R58, R59, R68, R69, R72, R76, R82, R83, R84, R85, R105	0603R	0±5%,0805, 4.7K±5%,0805, 470R ±5%,0805, R_1	16
470R	贴片电阻	R36, R40	0603R	470R ±5%,0805	2
20K	贴片电阻	R37	0603R	10K±5%,0805	1
22M/ 1206	resistance	R41	1206R	RES	1
10K	ERJ-2RKF1001X, ERJ-2RKF4751X, ◎ 33K ±5% 0603 封装, 贴片电阻	R42, R43, R44, R50, R63, R65, R66, R70, R73, R79, R88, R109, R116	0603R	0±5%,0805, 10K±5%,0805, 0603R_33K, CMP-1030148-ERJ-2RKF1001X-A,01, CMP-1030150-ERJ-2RKF4751X-A,01, R_1	13
0.18R	贴片电阻	R45, R46, R47, R48, R52, R53, R54, R55	1206R	0±5%,0805	8
7.5K 1%	贴片电阻	R49	0603R	0±5%,0805	1
200R5%	贴片电阻	R51	0603R	0±5%,0805	1
NC	◎ 33K ±5% 0603 封装	R60, R61, R62, R78, R98, R100, R103	0603R	0603R_33K, R_1	7
1.00K	ERJ-2RKF1001X	R64	0603R	CMP-1030148-ERJ-2RKF1001X-A,01	1
300R	贴片电阻	R67	0603R	4.7K±5%,0805	1
0		R71, R74, R75, R77, R80, R81, R87, R88, R106, R107, R108	0603R	R_1	11
33R		R89, R90, R91, R92, R93, R96, R97, R98, R101, R102, R104	0603R	R_1	11
6.2K 1%		R95	0603R	R_1	1
1.5K	贴片电阻	R118, R119, R121, R122	0603R	1K±5%,0805	4
100R	ERJ-2RKF1001X	R134, R135	0603R	CMP-1030148-ERJ-2RKF1001X-A,01	2
75R	贴片排阻	RP1, RP2	RP0603-4	75R*4	2
RP0603-4		RP3, RP4, RP5, RP6, RP7, RP8	RP0603-4	RP0603-4	6
HR8B2445E		T1, T2, T3, T4	HR8B2445E	HR8B2445E	4
HY601680	网线变压器	T5, T6	SOL-16	HY601680	2
LM2575HVSADJ	SIMPLE SWITCHER 1A Step-Down Voltage Regulator	U1	2575SMD	LM2575	1
SCT2650STER		U2	SOP-8-PP	SCT2650STER	1
LM1117-3.3		U3	SOT-223	LM1117HV	1
SP4052		U4, U5, U6, U7, U18, U19	SP4052	SP4052	6
SN74LVC1G125DBV		U8, U10	SOT-23-5L	74LVC1G125	2
ZY0505		U9	ZY-6S-2W	ZY0505	1
SP485EN	485总线IC	U11	SO-8	SP485EN	1
TPS23881		U12	TPS23881	TPS23881	1
AH121		U13	AH121	AH121	1
HFD5/ 5		U14, U15, U16, U17	继电器HFD5		4
IP179-128PIN		U20		IP179-128PIN	1
74LV164		U21, U22	TSSOP-14	74164_3	2
25.0M	有源晶振	X1	KTAL3225	SMT745HEV-60.0M	1