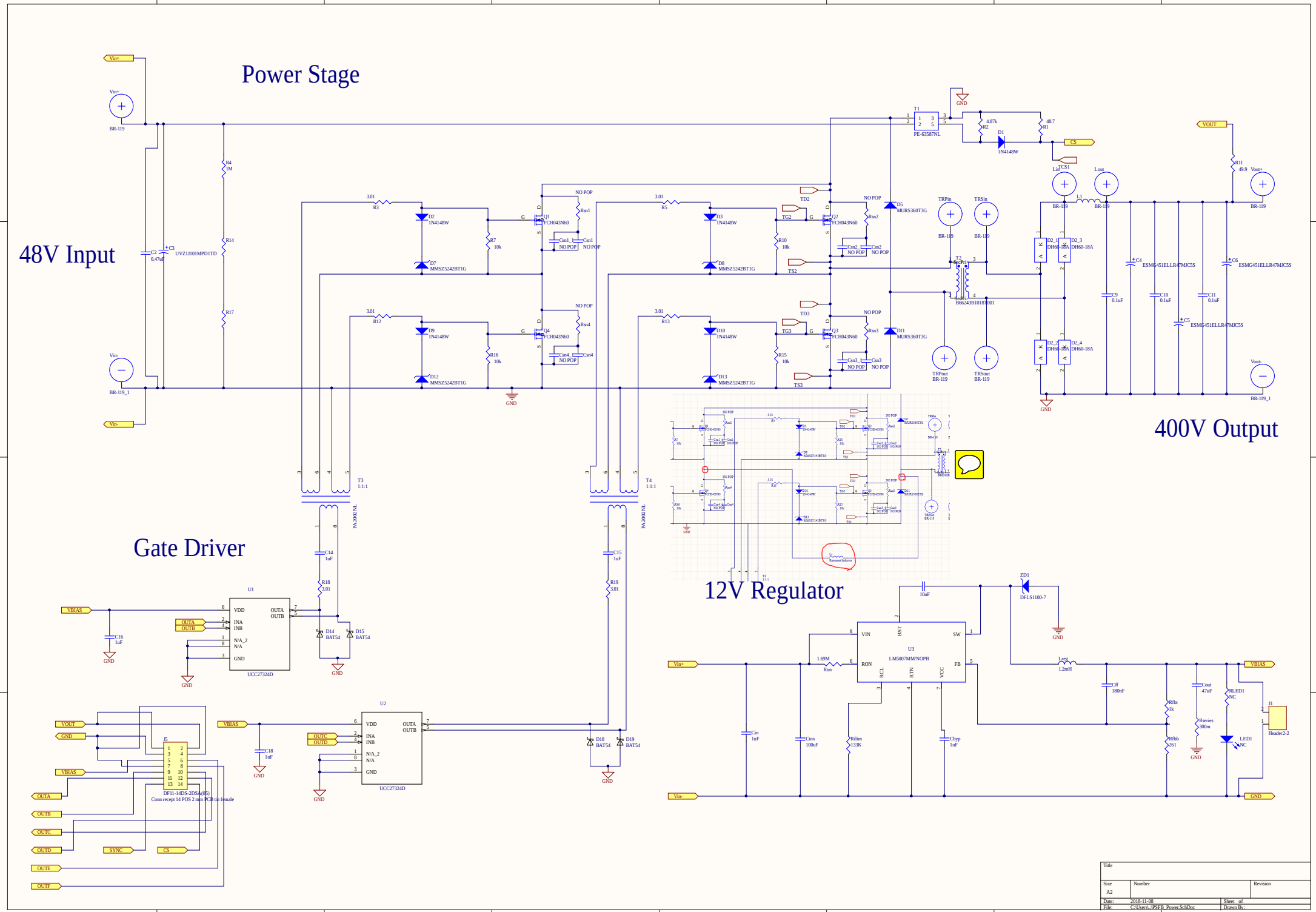

Title		
Size A2	Number	Revision
Date: 2018-11-08		Sheet of
File: C:\Users\...\PSFB_Power.SchDoc		Drawn By: