LED_Front_Right

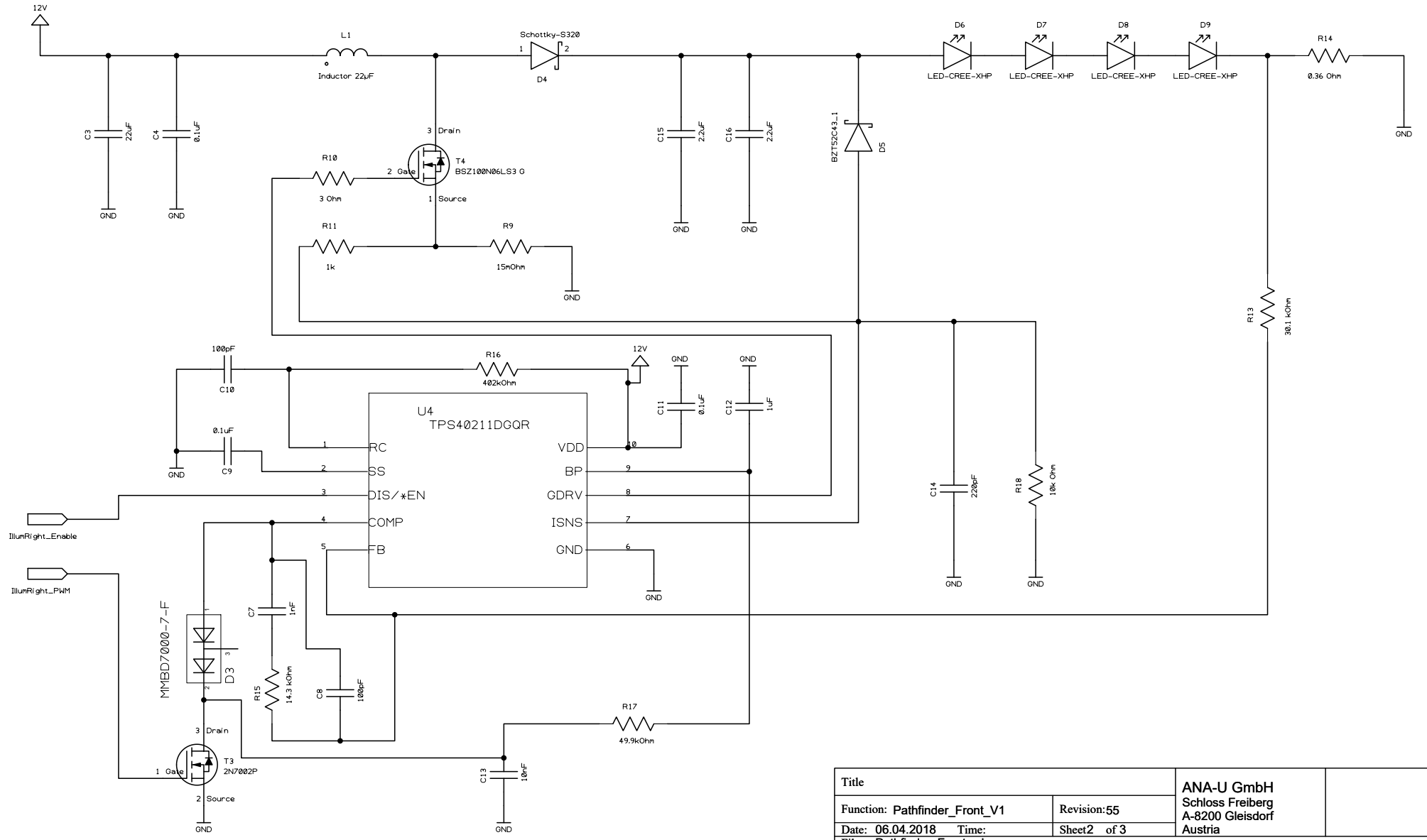

Title		ANA-U GmbH Schloss Freiberg A-8200 Gleisdorf Austria
Function: Pathfinder_Front_V1	Revision:55	
Date: 06.04.2018 Time:	Sheet2 of 3	
File: Pathfinder_Front.sch		