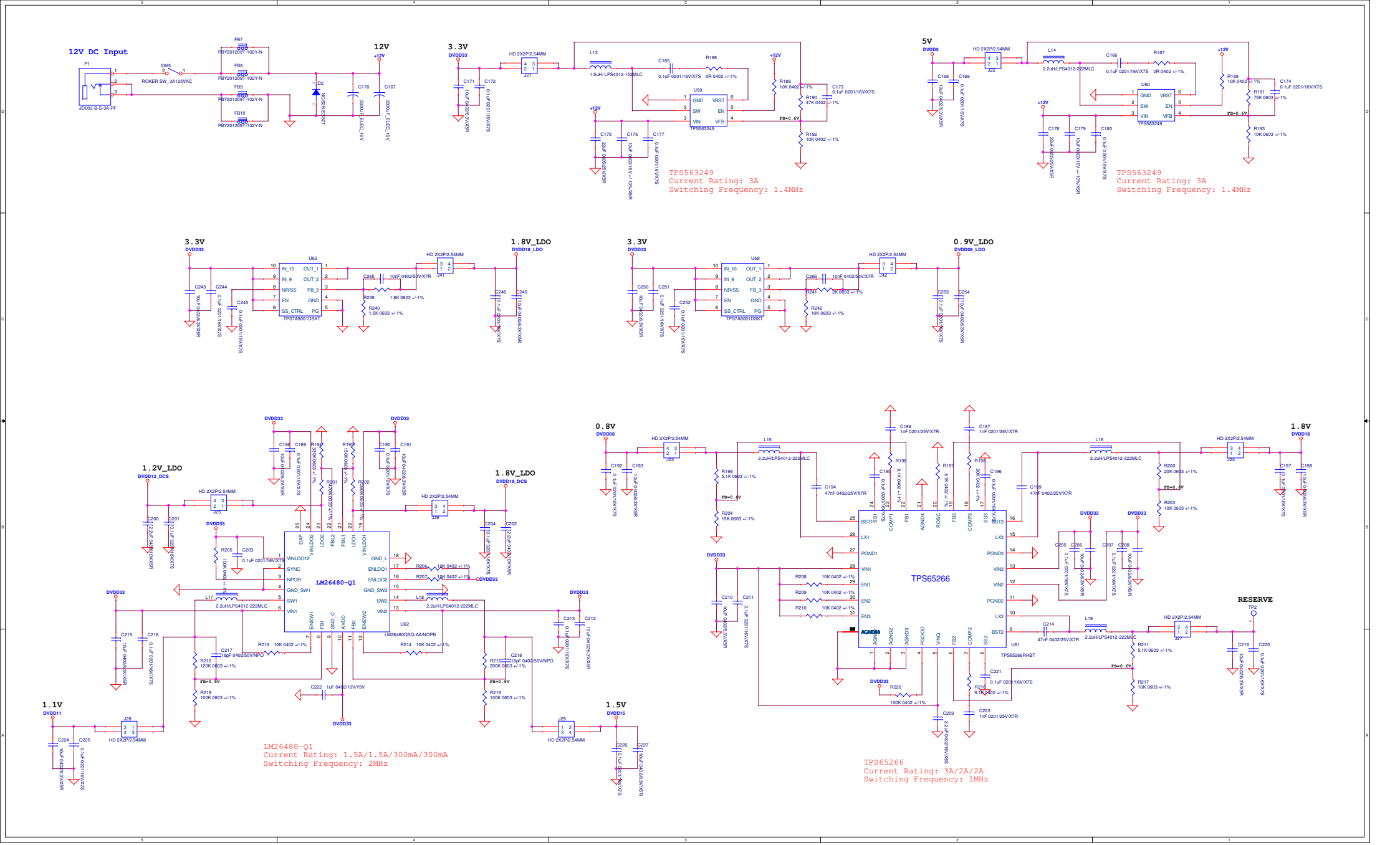
12V DC Input
P1
JD003-B-S-3A-PF
SW5
ROKER SW_3A125VAC
FB7
PBY2012091-102Y-N
FB8
PBY2012091-102Y-N
FB9
PBY2012091-102Y-N
FB10
PBY2012091-102Y-N
D2
NCS2B-E3/52T
C170
3300uF_ELEC_16V
C167
3300uF_ELEC_16V
12V
3.3V
DVDD33
HD 2X2P/2.54MM
J21
L13
1.5uH/ LPS4012-152MLC
C165
0.1uF 0201/16V/X7S
R186
0R 0402 +/-1%
U59
TPS563249
R188
10K 0402 +/-1%
R190
47K 0402 +/-1%
C173
0.1uF 0201/16V/X7S
R192
10K 0402 +/-1%
FB=0.6V
TPS563249
Current Rating: 3A
Switching Frequency: 1.4MHz
5V
DVDD5
HD 2X2P/2.54MM
J22
L14
2.2uH/LPS4012-222MLC
C166
0.1uF 0201/16V/X7S
R187
0R 0402 +/-1%
U60
TPS563249
R189
10K 0402 +/-1%
R191
75K 0603 +/-1%
C174
0.1uF 0201/16V/X7S
R193
10K 0603 +/-1%
TPS563249
Current Rating: 3A
Switching Frequency: 1.4MHz
3.3V
DVDD33
U63
TPS7A9001DSKT
HD 2X2P/2.54MM
J41
1.8V_LDO
DVDD18_LDO
C265
10nF 0402/50V/X7R
R239
1.8K 0603 +/-1%
R240
1.5K 0603 +/-1%
3.3V
DVDD33
U68
TPS7A9001DSKT
HD 2X2P/2.54MM
J42
0.9V_LDO
DVDD09_LDO
C266
10nF 0402/50V/X7R
R241
2K 0603 +/-1%
R242
10K 0603 +/-1%
1.2V_LDO
DVDD12_DCS
HD 2X2P/2.54MM
J25
1.8V_LDO
DVDD18_DCS
HD 2X2P/2.54MM
J26
LM26480-Q1
U62
LM26480QSQ-AA/NOPB
L17
2.2uH/LPS4012-222MLC
L18
2.2uH/LPS4012-222MLC
R206
10K 0402 +/-1%
R207
10K 0402 +/-1%
R213
10K 0402 +/-1%
R214
10K 0402 +/-1%
C217
18pF 0402/50V/NPO
R212
120K 0603 +/-1%
R218
100K 0603 +/-1%
C222
1uF 0402/10V/Y5V
C218
18pF 0402/50V/NPO
R215
200K 0603 +/-1%
R219
100K 0603 +/-1%
FB=0.5V
1.1V
DVDD11
J28
HD 2X2P/2.54MM
1.5V
DVDD15
J29
HD 2X2P/2.54MM
LM26480-Q1
Current Rating: 1.5A/1.5A/300mA/300mA
Switching Frequency: 2MHz
0.8V
DVDD08
HD 2X2P/2.54MM
J23
L15
2.2uH/LPS4012-222MLC
R199
5.1K 0603 +/-1%
R204
15K 0603 +/-1%
C186
1nF 0201/25V/X7R
C187
1nF 0201/25V/X7R
C194
47nF 0402/25V/X7R
R196
R197
R198
C196
C199
47nF 0402/25V/X7R
TPS65266
U61
TPS65266RHBT
R208
10K 0402 +/-1%
R209
10K 0402 +/-1%
R210
10K 0402 +/-1%
R220
100K 0402 +/-1%
C209
2.2uF 0402/16V/X6S
C221
0.1uF 0201/16V/X7S
R216
9.1K 0402 +/-1%
C223
1nF 0201/25V/X7R
L16
2.2uH/LPS4012-222MLC
R200
20K 0603 +/-1%
R203
10K 0603 +/-1%
FB=0.6V
1.8V
DVDD18
HD 2X2P/2.54MM
J24
RESERVE
TP2
L19
2.2uH/LPS4012-222MLC
HD 2X2P/2.54MM
J27
C214
47nF 0402/25V/X7R
R211
5.1K 0603 +/-1%
R217
10K 0603 +/-1%
TPS65266
Current Rating: 3A/2A/2A
Switching Frequency: 1MHz