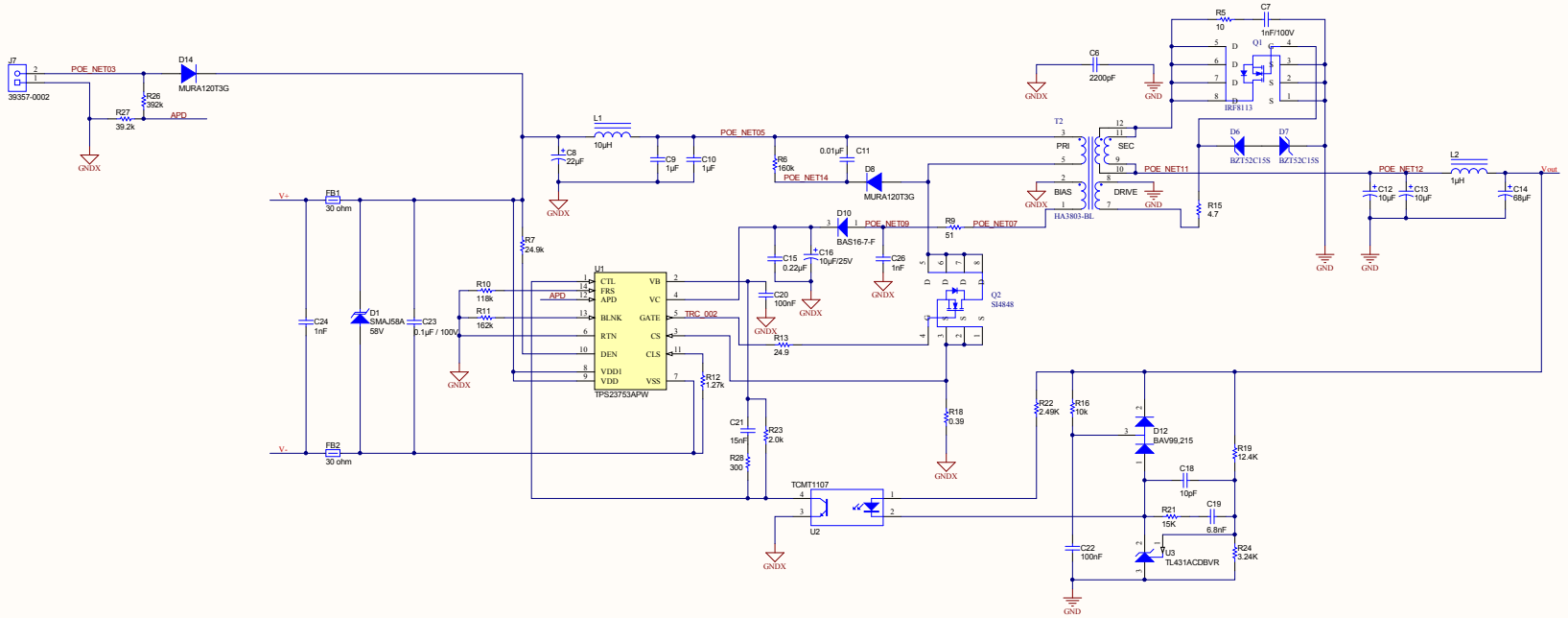

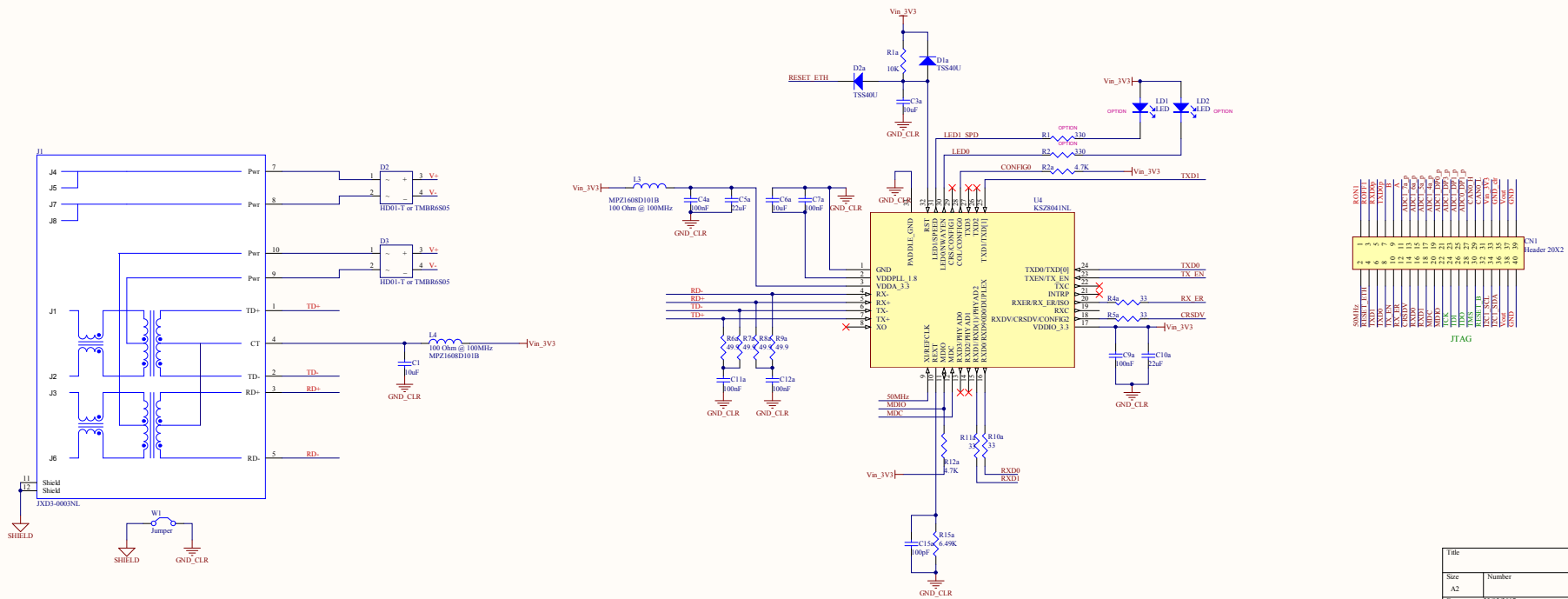

Title		
Size A2	Number	Revision
Date: 23/02/2017		Sheet of
File: C:\Schematics PCBs\PoE\PoE.SchDoc		Drawn By: