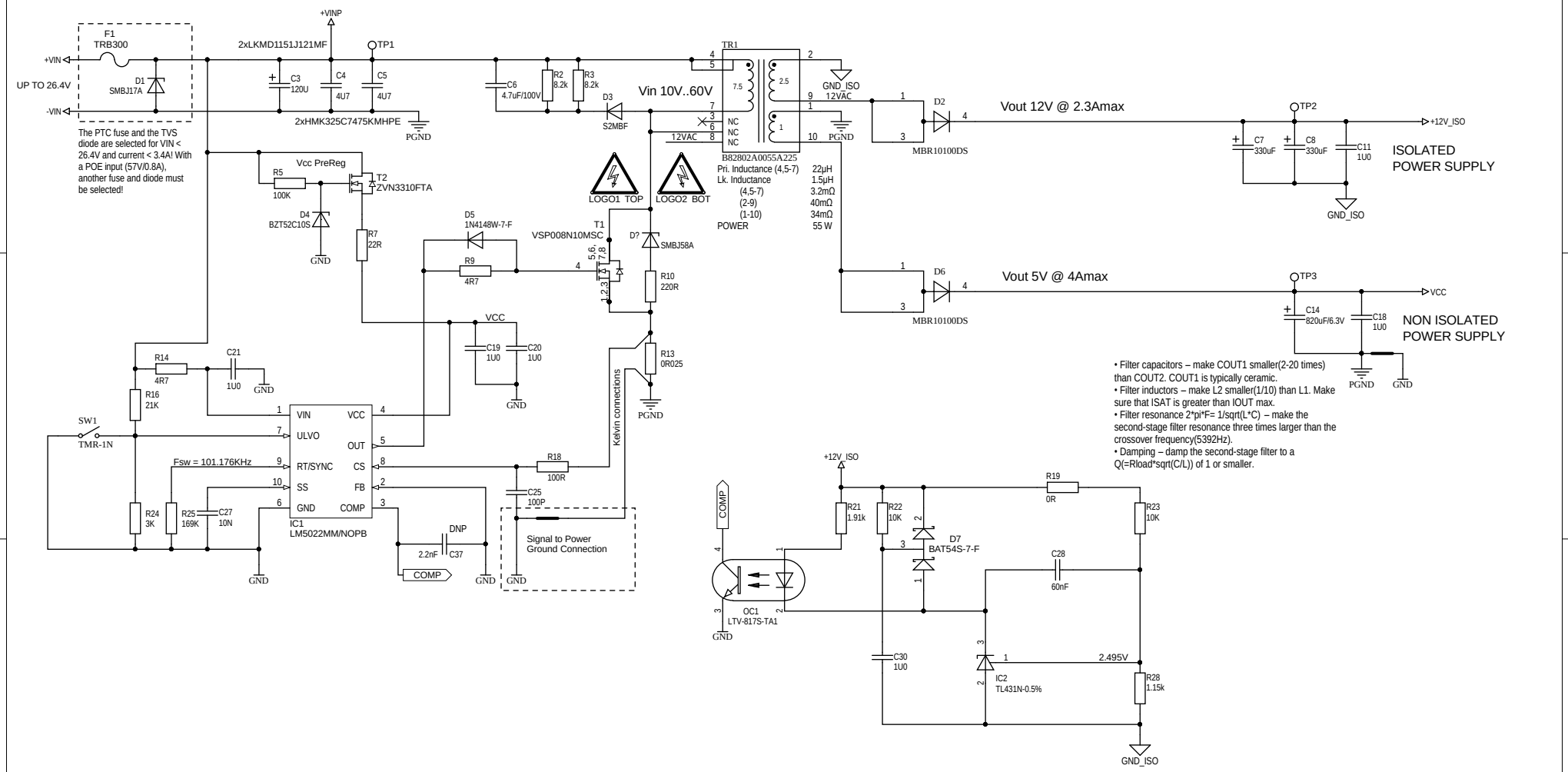

NOTES:

1) R? for test purposes only
3) Due to losses provide copper area to T?/D?

Revision History	
Revision	Notes
1.0	* First release

Title **Power Board Schematic Diagram**

Size: A3 | Number: PWR_BRD | Revision: 1.0

Date: 11/30/2020 Time: 9:00:04 AM Sheet 1 of 1

File: C:\Users\Public\Documents\Altium\Projects\PowerBoard\V2.0\PowerBoard_V2.1_SH1.SchDoc