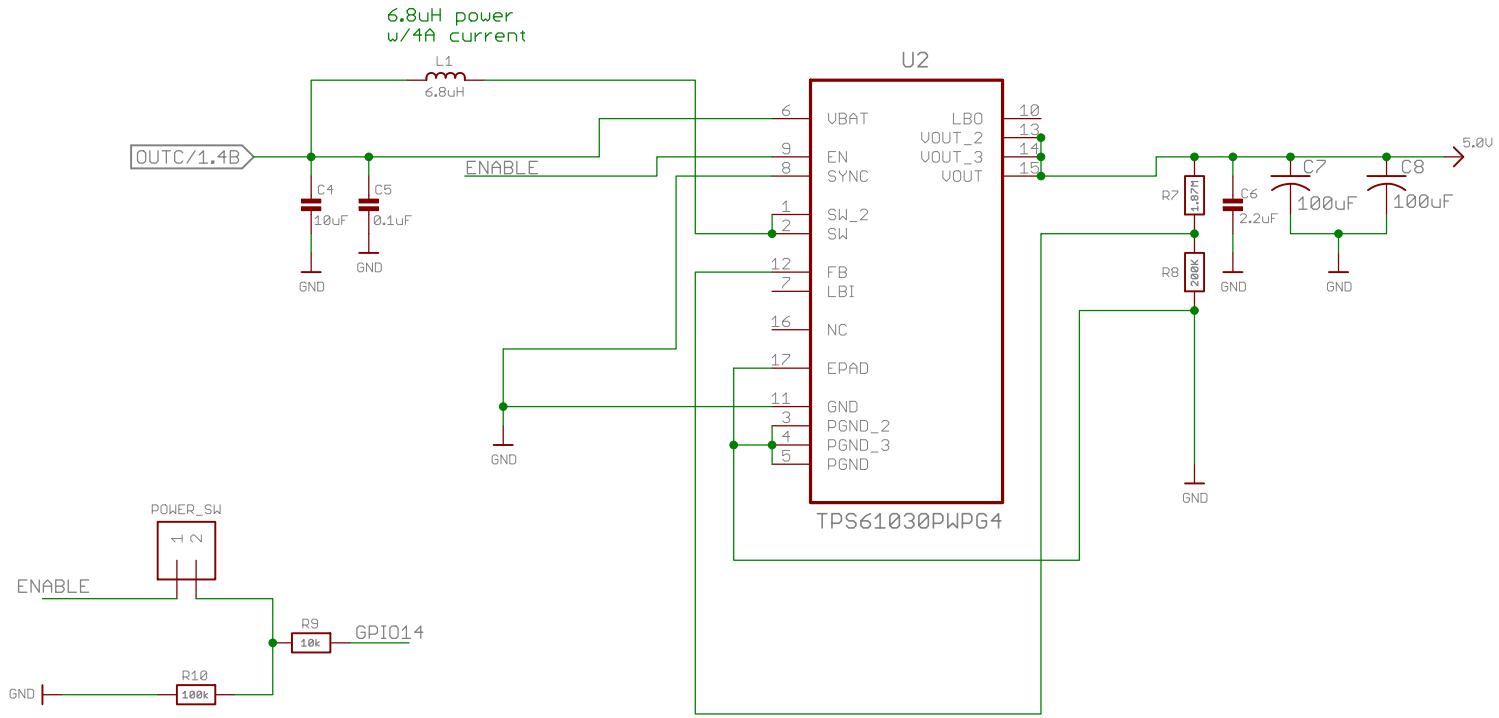

Both grounds must be connected on the PCB at only one point close to the GND pin.

TITLE: Powersupply_fin	
Document Number:	REV:
Date: 04.04.2016 14:07	Sheet: 2/3