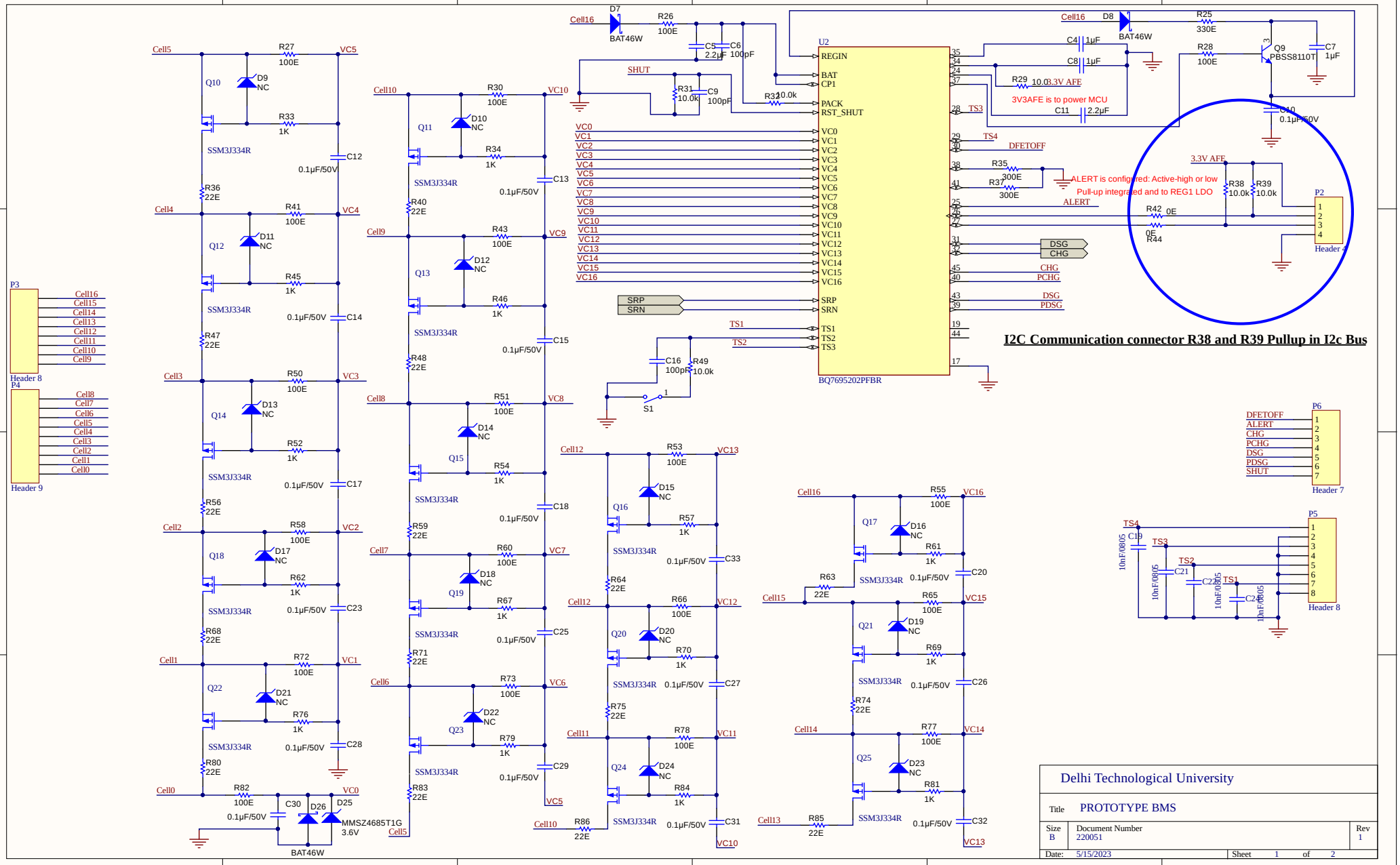
U2
BQ7695202PFBR
REGIN
BAT
CP1
PACK
RST_SHUT
VC0
VC1
VC2
VC3
VC4
VC5
VC6
VC7
VC8
VC9
VC10
VC11
VC12
VC13
VC14
VC15
VC16
SRP
SRN
TS1
TS2
TS3
DSG
CHG
PCHG
PDSG
DFETOFF
ALERT
SHUT
3.3V AFE
3V3AFE is to power MCU
ALERT is configured: Active-high or low
Pull-up integrated and to REG1 LDO
I2C Communication connector R38 and R39 Pullup in I2c Bus
P2
Header 4
P3
Header 8
P4
Header 9
P6
Header 7
P5
Header 8
SSM3J334R
BAT46W
MMSZ4685T1G
3.6V
Delhi Technological University
Title PROTOTYPE BMS
Size B
Document Number 220051
Rev 1
Date: 5/15/2023
Sheet 1 of 2