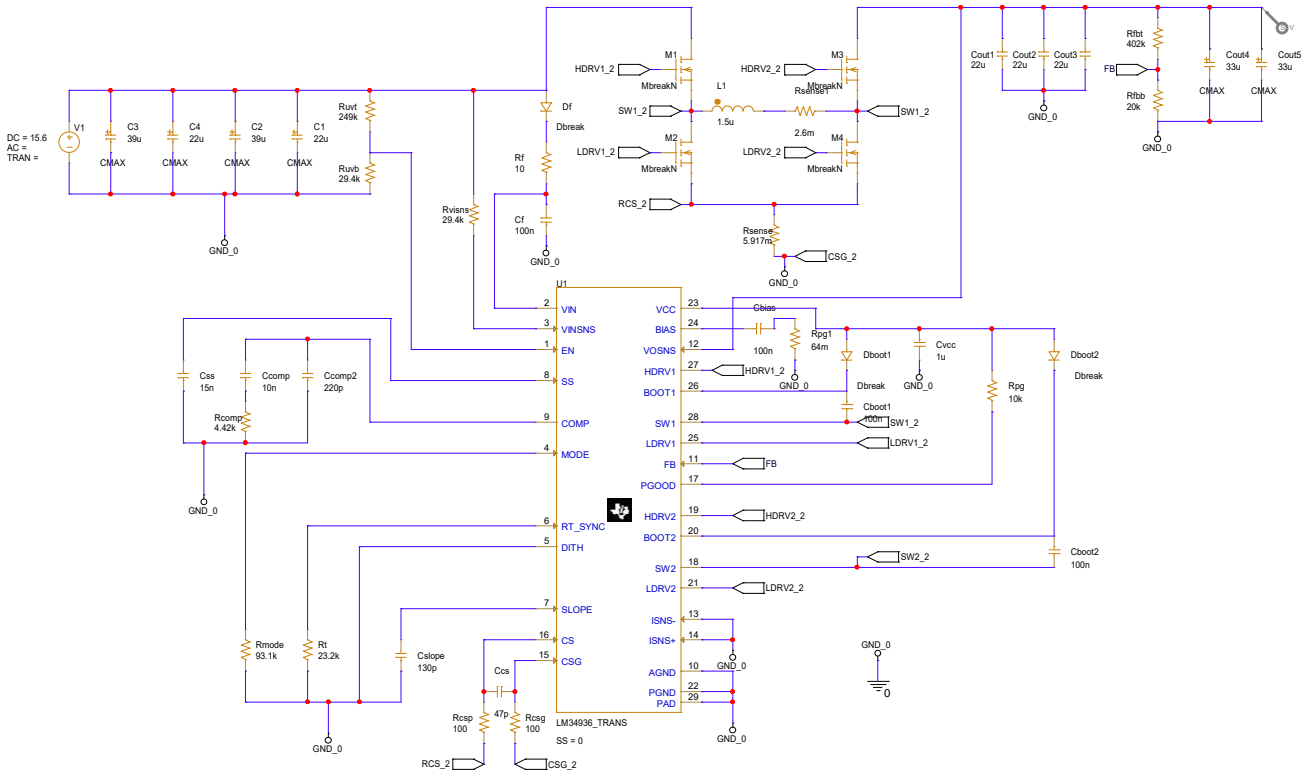

Title	<Title>	
Size C	Document Number <Doc>	Rev <RevCode>
Date: Tuesday, April 19, 2022	Sheet 1 of 1	