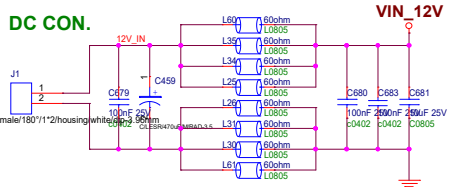

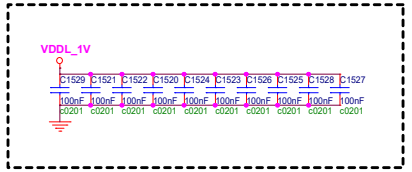

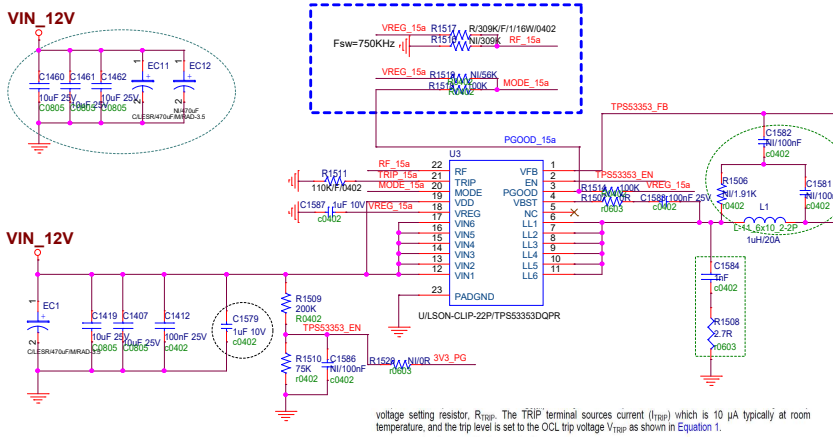

The overcurrent setting resistor, R_{TRIP}, can be determined by .

$$R_{TRIP}(k\Omega) = \frac{\left(I_{OCP} - \left(\frac{1}{2 \times L \times f_{SW}} \times \frac{(V_{IN} - V_{OUT}) \times V_{OUT}}{V_{IN}}\right) \times 32 \times R_{DS(on)}(m\Omega)\right)}{I_{TRIP}(\mu A)}$$

where

- I_{OCP} is the TRIP pin sourcing current (10 µA).
- $R_{DS(on)}$ is the thermally compensated on-time resistance value of the low-side MOSFET. (15)

Use an $R_{DS(on)}$ value of 1.6 mΩ for an overcurrent level of approximately 20 A. Use an $R_{DS(on)}$ value of 1.7 mΩ for overcurrent level of approximately 10 A.

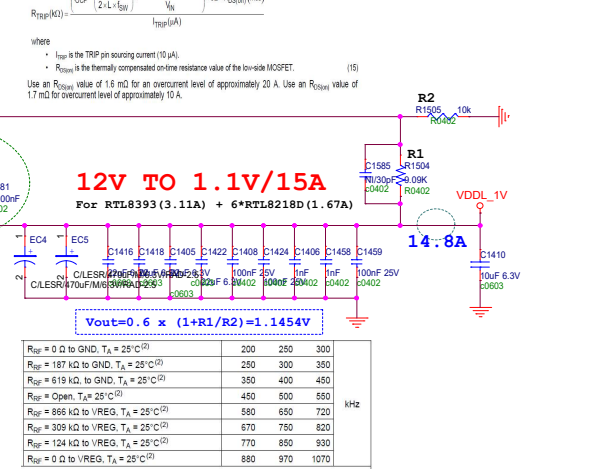

R_{RF} = 0 Ω to GND, T_A = 25°C(2)	200	250	300	kHz
R_{RF} = 187 kΩ to GND, T_A = 25°C(2)	250	300	350	
R_{RF} = 619 kΩ, to GND, T_A = 25°C(2)	350	400	450	
R_{RF} = Open, T_A= 25°C(2)	450	500	550	
R_{RF} = 866 kΩ to VREG, T_A = 25°C(2)	580	650	720	
R_{RF} = 309 kΩ to VREG, T_A = 25°C(2)	670	750	820	
R_{RF} = 124 kΩ to VREG, T_A = 25°C(2)	770	850	930	
R_{RF} = 0 Ω to VREG, T_A = 25°C(2)	880	970	1070	

voltage setting resistor, R_{TRIP}. The $\overline{TRIP}$ terminal sources current (I_{TRIP}) which is 10 µA typically at room temperature, and the trip level is set to the OCL trip voltage V_{TRIP} as shown in Equation 1.

$$V_{TRIP}(mV) = R_{TRIP}(k\Omega) \times I_{TRIP}(\mu A) \quad (1)$$

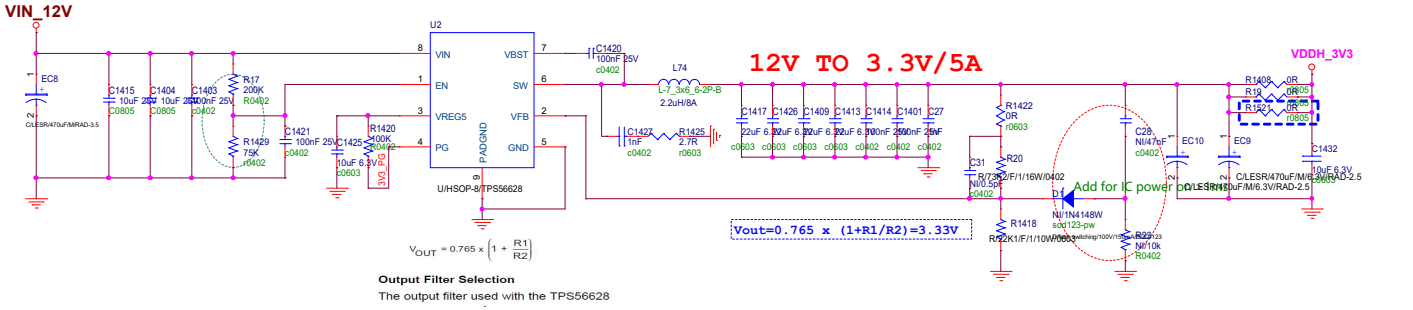

$$V_{OUT} = 0.765 \times \left(1 + \frac{R1}{R2}\right)$$

Output Filter Selection

The output filter used with the TPS56628

3.3V TO 1.5V/1A