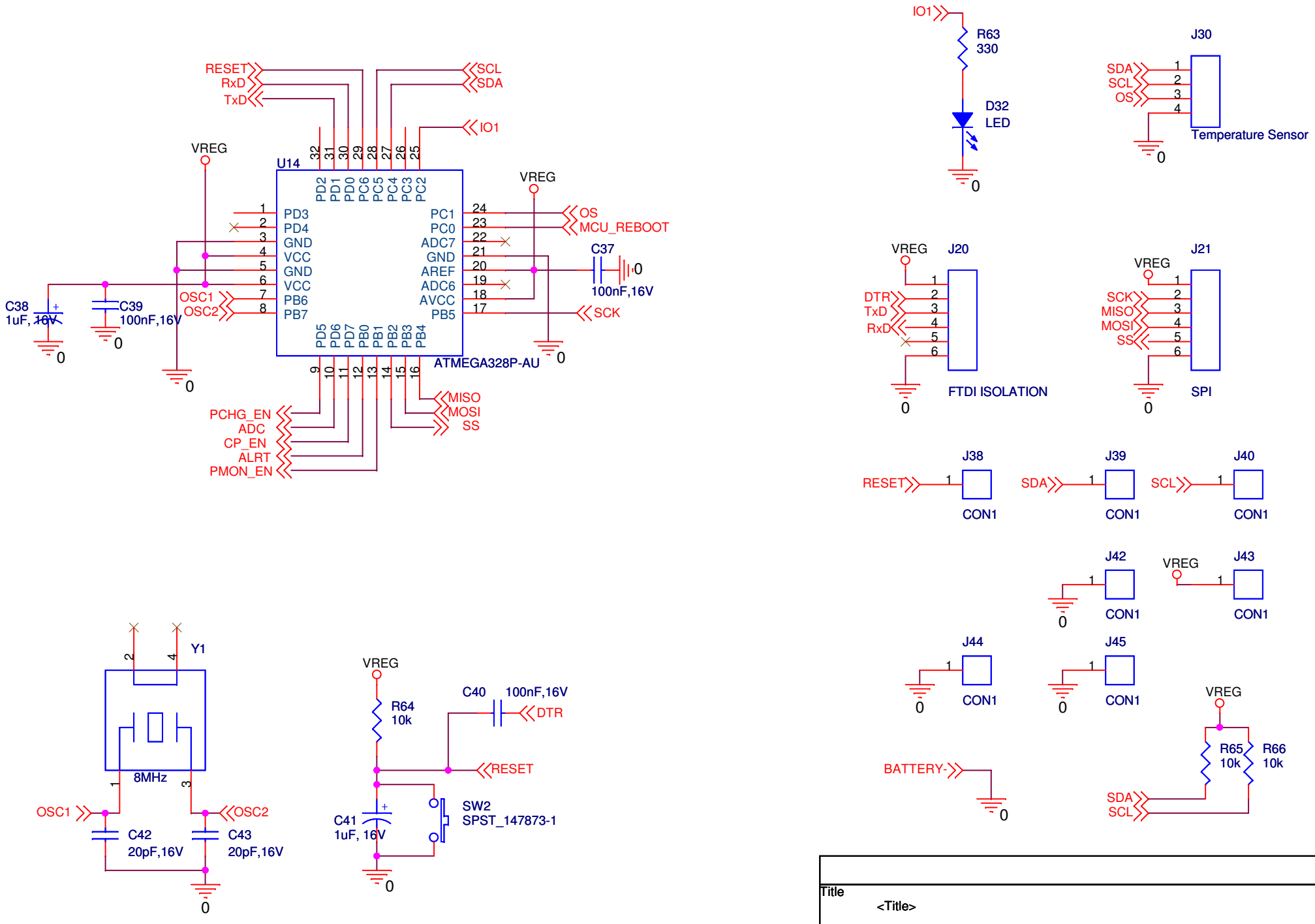

Title	<Title>	
Size A	Document Number <Doc>	Rev <RevCode>
Date: Saturday, March 04, 2017	Sheet 2 of 3	